ORDER NO. KM48805688C1
F5

Service Manual

EASA-PHONE

ELECTRONIC MODULAR SWITCHING SYSTEM **KX-T61610-1**

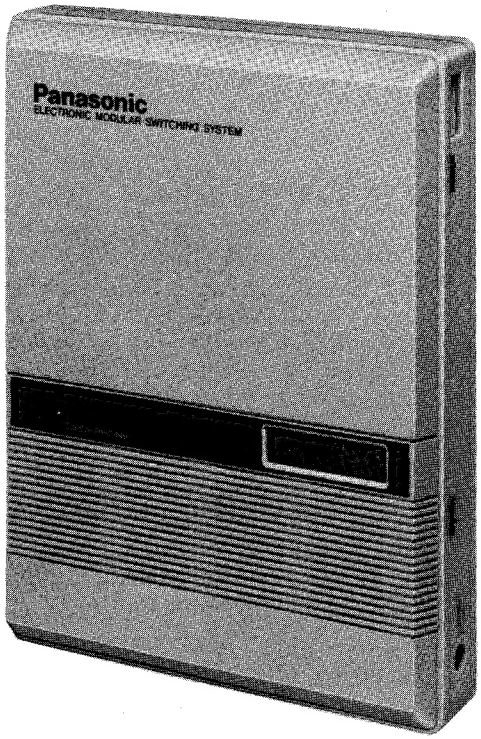

SPECIFICATIONS\ТЕХНИЧЕСКИЕ ХАРАКТЕРИСТИКИ
NAME AND LOCATION\НАИМЕНОВАНИЕ И РАСПОЛОЖЕНИЕ
CONNECTION\СОЕДИНЕНИЯ
PROGRAMMING\ПРОГРАММИРОВАНИЕ
IC I/O DATA\ИНФОРМАЦИЯ О МИКРОСХЕМАХ ВВОДА/ВЫВОДА
BLOCK DIAGRAM\БЛОК - СХЕМА
TERMINAL GUIDE OF IC'S, TRANSISTORS AND DIODES\ЦОКОЛЕВКА ИНТЕГРАЛЬНЫХ СХЕМ, ТРАНЗИСТОРОВ И ДИОДОВ
SCHEMATIC DIAGRAM\ПРИНЦИПИАЛЬНЫЕ СХЕМЫ
WIRING CONNECTION DIAGRAM\СХЕМА СОЕДИНЕНИЙ
IC BLOCK DIAGRAM\БЛОК - СХЕМЫ ИНТЕГРАЛЬНЫХ СХЕМ
EXTENSION CORD CONNECTING METHOD\ПОДСОЕДИНЕНИЕ СЕРВИСНЫХ КАБЕЛЕЙ
ADJUSTMENTS\РЕГУЛИРОВКИ
EXPLODED VEIW\СБОРОЧНЫЙ ЧЕРТЕЖ
ACCESSORIES AND PACKING MATERIALS\ПРИНАДЛЕЖНОСТИ И УПАКОВОЧНЫЕ МАТЕРИАЛЫ
REPLACEMENT PARTS LIST\СПИСОК ЗАПАСНЫХ ЧАСТЕЙ

Panasonic

Matsushita Services Company
50 Meadowland Parkway,
Secaucus, New Jersey 07094

Panasonic Hawaii Inc.
99-859 Iwaiwa Street
P.O. Box 774
Honolulu, Hawaii 96808-0774

Matsushita Electric of Canada Limited
5770 Ambler Drive, Mississauga,
Ontario, L4W 2T3

Panasonic Sales Company, Division of Matsushita Electric of Puerto Rico, Inc.
Ave. 65 De Infanteria, KM 9.7
Victoria Industrial Park
Carolina, Puerto Rico 00630

SPECIFICATIONS

General Description

1. Capacity	Outsides (CO)	6	
	Stations	16	
2. Control Method	Stored Program CPU: 8 bits CPU, 4 bits CPU Control ROM: 64 KB, Control RAM: 16 KB		
3. Switching	Space Division CMOS Crosspoint Switch		
4. Power Supplies	Primary	AC 120 V 60 Hz	
	Secondary	Station Supply Volt: −24 V, Circuit Volt: +5 V, ±13.4 V, −24 V, −18 V	
	Power Failure	• 6 outsides assigned to stations (1 through 6)...power failure transfer • System operation for 4 hours by optional Backup Adaptor.	
5. Dialing	Outward	Dial Pulse	10PPS
		Tone Dial	
	Internal	Dial Pulse	10PPS, 20PPS
		Tone Dial	
	Mode Conversion	DP-DTMF, DTMF-DP	
6. Intercom paths	4		
7. Connector	Outsides (CO)	Modular Jack (RJ-11)	
	Station	Modular Jack	
	Paging Output	Pin Jack (RCA JACK)	
	External Music Input	two-conductors Jack (MINI JACK 3/32 inch diameter)	
8. EXT Connection	Cable	1 pair wire (Standard Telephone) 2 pair wire (KX-T61630/KX-T61620/KX-T61650/KX-T30830/KX-T30820/KX-T30850)	
9. SMDR (Station Message Detail Recording)	Interface	RS-232C	
	Output Equipment	Printer, Data Terminal	
	Detail Recording	Date, Time, Ext. Number, CO Number, Calling Number, Calling Time, Account Code	
10. Dimensions	334 (W)×437 (H)×107 (D) mm (13 9/32"×17 7/32"×4 7/32")		
11. Weight	7.2 kg (15 lb 14 oz)		
12. Power Consumption	40 W (Max.)		

Characteristics

1. Station Loop Limit	KX-T61630/KX-T61620/KX-T61650/KX-T30830/KX-T30820/KX-T30850	40 ohms
	Standard Telephone	600 ohms including set
	Doorphone	20 ohms
2. Minimum Leak Resistance	15,000 ohms	
3. Maximum Number of Station Instruments per Line	1 (KX-T61630, KX-T61620, KX-T61650, KX-T30830, KX-T30820 or KX-T30850) or 6 sets/Ringing group	
4. Ring Voltage	90 Vrms at 20 Hz depends on Ringing Load	
5. Primary Power	120 Vac, 60 Hz, 0.4 A maximum	
6. Central Office Loop Limit	1600 ohms maximum	
7. Environmental Requirements	0–40°C, 10%–90%	
8. Hookswitch Flash Timing Range	204–1000 msec	

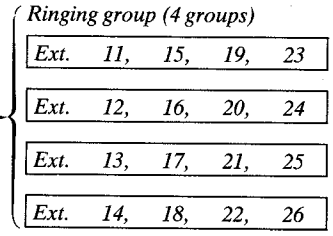

Design and specifications are subject to change without notice.

NAME AND LOCATION

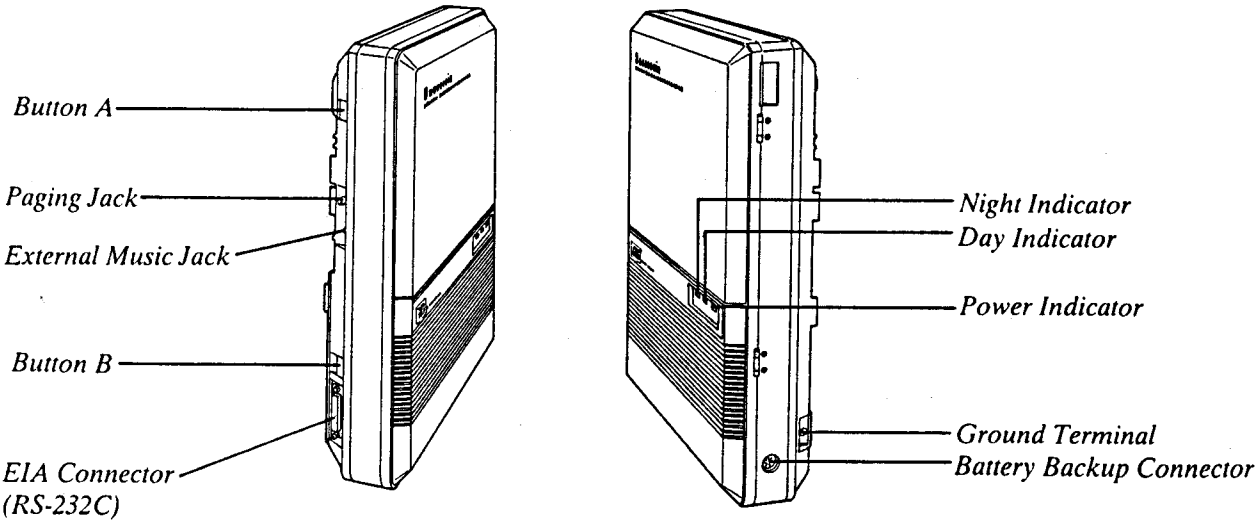

Fig. 3

Push Buttons A and B simultaneously to open Front Cover.

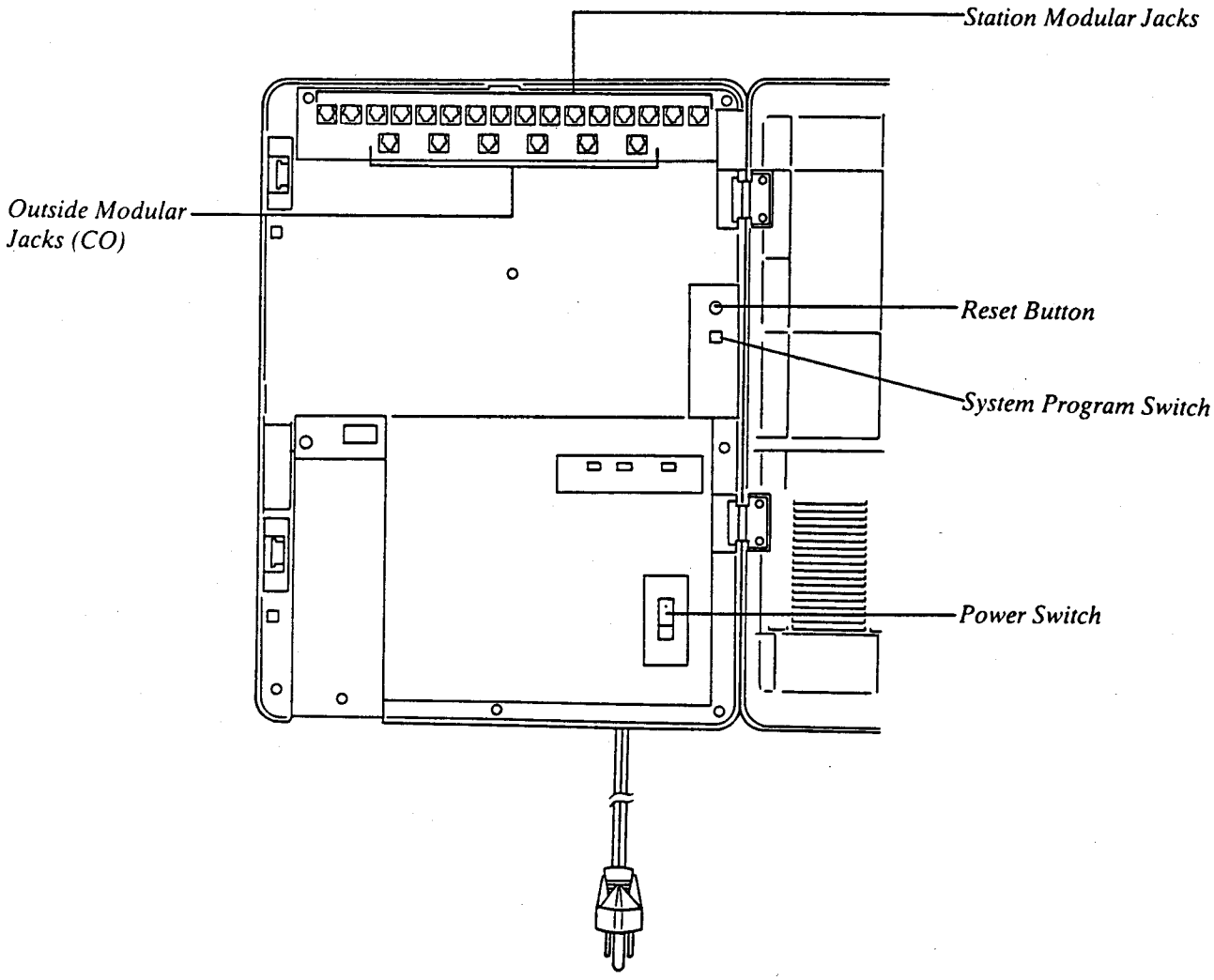

Fig. 4

CONNECTION

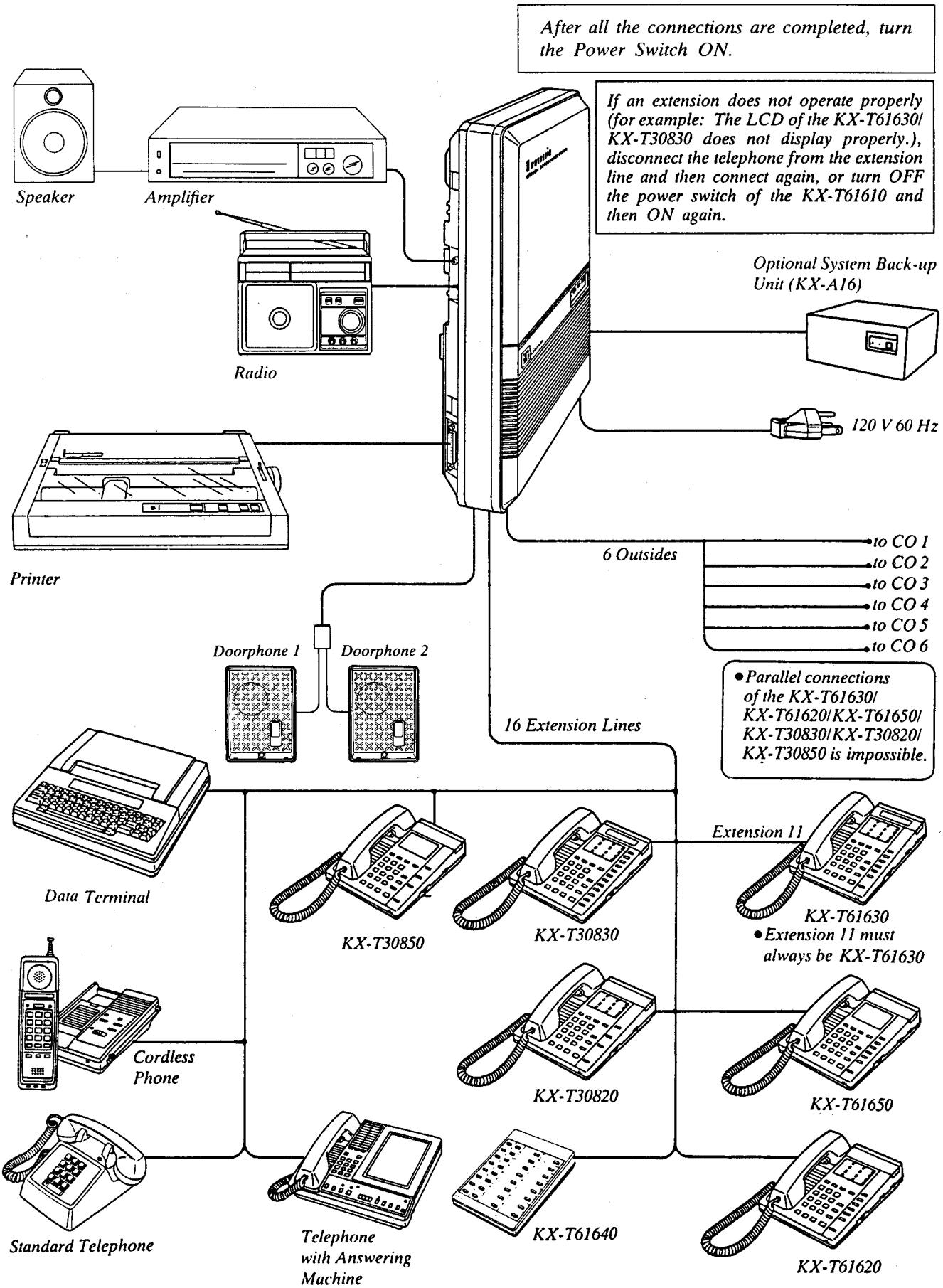

Fig. 5

PROGRAMMING

Programming Instructions

1. At extension 11:
All system programming changes (example: system clear, station program clear, toll restriction, hookswitch flash timing...) are done through extension 11.

> ***•Extension 11 must always be a Panasonic model, KX-T61630.***

2. System Program Switch setting:
The System Program Switch located on the KX-T61610 must be set to the PROGRAM position while making program changes. After all programming changes are completed, return the program switch to the SET position.

3. Overlay:
This overlay is used for programming the system and the program function names are inscribed on this card.

4. Before system programming, operate the system clear and station program clear to set to the default data of the programming.

A. System Clear:
1 Dial (99).
•"SYSTEM CLEAR" will be displayed.
2 Press the NEXT button.
•"ALL CLEAR?" will be displayed.
3 Press the MEMORY button to clear system.
4 To exit from system clear, press the END button.

The following features are preset as the default data.
Date and Time Setting
System Speed Dialing
CO Connection Assignment
Dial Mode (Tone/Pulse) Selection
Switching Mode (Day/Night Service)
Starting Time (Day/Night Service)
Flexible Day Outward Dialing Assignment
Flexible Night Outward Dialing Assignment
Flexible Day Ringing Assignment
Flexible Night Ringing Assignment
Toll Restriction—Class Assignment
Toll Restriction—Area Code Selection
Programmable Operator Call
Host PBX Access Codes Assignment
Automatic Answering (Automatic/Manual) Selection
Preferred CO Line Assignment
Programmable Call Waiting
Duration Time Count Start Mode
SMDR Communication Parameters
System Data Dump
SMDR Incoming/Outgoing Selection
Hookswitch Flash Timing
Disconnect Time
Calling Party Control (CPC) Signal
Intercom Alerting Mode
Programmable Doorphone
Dial Call Pickup Group Assignment
Account Code Input Mode
Delayed Ringing Assignment
Delayed Ringing Count Selection
DSS Console Assignment
Hold Time Reminder
Hold Recall Time Set
Programmable External Paging Access Tone
DTMF Receiver
Programmable Toll Prefix
Programmable Secret Speed Dial
Programmable Directory Assistance
DSS Button Mode
Transfer Recall Time
M3/FWD Selection

B. Station Program Clear:
1 Dial (98).
•"EXT CLEAR" will be displayed.
2 Press the NEXT button.
•"ALL CLEAR?" will be displayed.
3 Press the MEMORY button to clear the system.
4 To exit from station clear, press the END button.

The following features are preset as the default data.
One Touch Dialing
Background Music
Call Forwarding
Data Line Security
Dial Call Pickup Deny
Do not Disturb
Auto CO Hunting
Pickup dial
Flexible CO Button
Flexible DSS Button

Example of Programming

1. Turn the Power Switch to ON .....

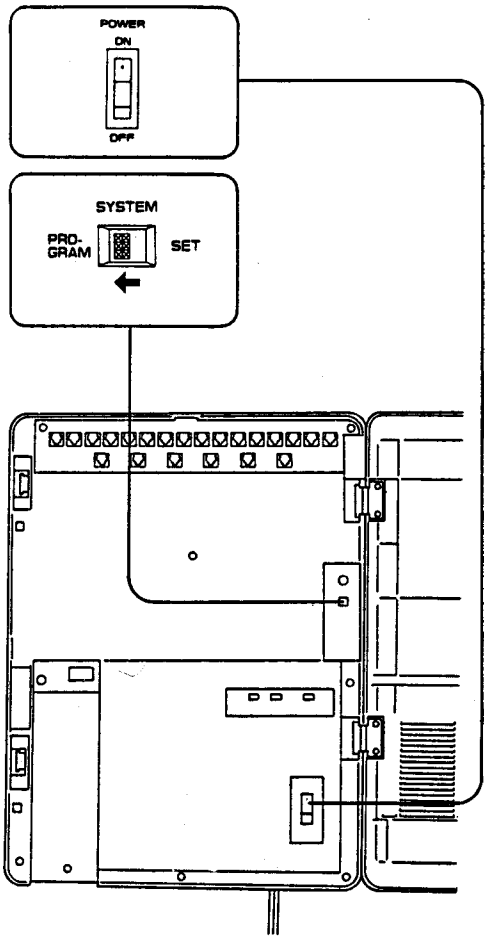

2. Set the System Program Switch to PROGRAM .....
The LCD on the KX-T61630 will show "ENTER PGM CODE".
- *Be sure the handset of extension 11 is in the cradle and the speakerphone button off.*

3. To program automatic line access number 9 and the phone number 987-654-3210 speed access code 00.

	KX-T61630 at extension 11 (Extension 11 must be a KX-T61630.)	
1.	*Dial (01) or press the AUTO button.*	*Display* [*SPEED DIALING*]
2.	*Press the NEXT button.*	[*ENTER SPEED CODE*]
3.	*Dial (00) or press the NEXT button.*	• *If nothing is stored in access code "00",* [*00: NOT STORED*] • *If already stored the automatic line access number 9 and the phone number 123-456-7890,* [*00: -123-456-7890*]
4.	① *Dial "9".* ② *Press "—" button.* ③ *Dial "987".* ④ *Press "—" button.* ⑤ *Dial "654".* ⑥ *Press "—" button.* ⑦ *Dial "3210".*	[*00: -987-654-3210*]
5.	*Press the MEMORY button.*	[*00: -987-654-3210*]
6.	• *To program the next access code, press the NEXT button.* • *To program a desired access code, press the SELECT button and then dial the number.*	
7.	*Repeat step 4 to 6.*	
8.	*To return to the initial program mode, press the END button.*	[*ENTER PGM CODE*]

4. Return the System Program Switch to SET

■ *To make program change, start from the beginning.*

While programming if a mistake is made,

1. Press the "END" button.

2. Start programming procedure from the beginning.

- *You will hear a beep after pressing the MEMORY button.*
- *The MEMORY indicator light will go on when the MEMORY button is pressed, and then the Indicator light will go out when the NEXT or PREV button is pressed.*

■ PROGRAMMING TABLE

TO SET	*PROGRAM ADDRESS*	*STEPS REQUIRED TO CHANGE PROGRAM*
Date and Time Setting	[00]	[NEXT] [A] [⇨] [SELECT] [⇨] [B] [⇨] [SELECT] [⇨] [C] [⇨] [D] [⇨] [SELECT] [MEMORY] [END] *year* *month* *day* *day of the week* *hour* *minute* *AM/PM*
System Speed Dialing Entry	[01] or [AUTO]	[SELECT] [NEXT] [AB] [CD] [phone number] [MEMORY] [END] [9]: *automatic line access number* [81] through [86]: *outside line access number* *speed access code [00 through 99]*
DSS Console Assignment	[02]	[NEXT] [AB] [⇨] [CD] [⇨] [EF] [⇨] [GH] [MEMORY] [END] *Telephone extension number paired with console 2* *Console 2 extension number* *Telephone extension number paired with console 1* *Console 1 extension number*

	Console 1	*Telephone paired with console 1*
Extension number		

	Console 2	*Telephone paired with console 2*
Extension number		

CO Connection Assignment	[03]	[NEXT] [NEXT] [SELECT] [MEMORY] [END] *CONNECT/NO CONNECT* *until the desired CO number appears*

	Default	*To make program change*					
CO (s)	*all CO's*	*1*	*2*	*3*	*4*	*5*	*6*
Connect	×						
No connect							

Dial Mode (Tone/ Pulse) Selection	[04]	[NEXT] [NEXT] [SELECT] [MEMORY] [END] *TONE/PULSE* *until the desired CO number appears*

	Default	*To make program change*					
CO (s)	*all CO's*	*1*	*2*	*3*	*4*	*5*	*6*
Tone (DTMF) mode	×						
Pulse mode							

Switching Mode (Day/Night Service)	[05]	[NEXT] [SELECT] [MEMORY] [END] *MAN/AUTO*

	Default	*To make program change*
Manual	×	
Automatic		

Starting Time (Day/Night Service)	[06]	[NEXT] [A] [⇨] [B] [⇨] [SELECT] [MEMORY] [NEXT] [C] [⇨] [D] [⇨] [SELECT] [MEMORY] [END] *minute* *AM/PM* *starting time for day service (hour)* *minute* *AM/PM* *starting time for night service (hour)*

	Default	*To make program change*
Day Plan	*9:00 AM*	
Night plan	*5:00 PM*	

TO SET	PROGRAM ADDRESS	STEPS REQUIRED TO CHANGE PROGRAM
Flexible Day Outward Dialing Assignment	[07]	[NEXT] [NEXT] [C...E] [MEMORY] [END] *CO number* *until the desired extension number appears*

	Default	To make program change															
Extensions	all extensions	11	12	13	14	15	16	17	18	19	20	21	22	23	24	25	26
CO 1	×																
CO 2	×																
CO 3	×																
CO 4	×																
CO 5	×																
CO 6	×																

Flexible Night Outward Dialing Assignment	[08]	[NEXT] [NEXT] [C...E] [MEMORY] [END] *CO number* *until the desired extension number appears*

	Default	To make program change															
Extensions	all extensions	11	12	13	14	15	16	17	18	19	20	21	22	23	24	25	26
CO 1	×																
CO 2	×																
CO 3	×																
CO 4	×																
CO 5	×																
CO 6	×																

Flexible Day Ringing Assignment	[09]	[NEXT] [NEXT] [C...E] [MEMORY] [END] *CO number* *until the desired extension number appears*

	Default	To make program change															
Extensions	all extensions	11	12	13	14	15	16	17	18	19	20	21	22	23	24	25	26
CO 1	×																
CO 2	×																
CO 3	×																
CO 4	×																
CO 5	×																
CO 6	×																

Flexible Night Ringing Assignment	[10]	[NEXT] [NEXT] [C...E] [MEMORY] [END] *CO number* *until the desired extension number appears*

	Default	To make program change															
Extensions	all extensions	11	12	13	14	15	16	17	18	19	20	21	22	23	24	25	26
CO 1	×																
CO 2	×																
CO 3	×																
CO 4	×																
CO 5	×																
CO 6	×																

Toll Restriction— Class Assignment	[11]	[NEXT] [NEXT] [SELECT] [MEMORY] [END] *CLASS 1/2/3/4* *until the desired extension number appears*

	Default	To make program change															
Extensions	all extensions	11	12	13	14	15	16	17	18	19	20	21	22	23	24	25	26
Class 1 (all calls)	×																
Class 2 (toll calls, local calls)																	
Class 3 (selected area-codes, local calls)																	
Class 4 (local calls)																	

TO SET	PROGRAM ADDRESS	STEPS REQUIRED TO CHANGE PROGRAM
Toll Restriction—Area Code Selection	[12]	[NEXT] [AB] [C] [MEMORY] [END] [SELECT] [C] — *area code with 3 digits* [AB] — *Memory location number*

	Memory location number									
	00	01	02	03	04	05	06	07	08	09
Area code entry										

Programmable Toll Prefix	[13]	[NEXT] [SELECT] [MEMORY] [END] [SELECT] — *WITH 1/ WITHOUT 1*

	Default	To make program change
With 1	×	
Without 1		

Programmable Operator Call	[14]	[NEXT] [NEXT] [SELECT] [MEMORY] [END] [SELECT] — *ENABLE/DISABLE* [NEXT] — *until the desired extension number appears*

	Default	To make program change															
Extensions	all extensions	11	12	13	14	15	16	17	18	19	20	21	22	23	24	25	26
Enable	×																
Disable																	

Programmable Directory Assistance	[15]	[NEXT] [SELECT] [MEMORY] [END] [SELECT] — *NO RESTRICT/RESTRICT*

	Default	To make program change
No restrict	×	
Restrict		

Automatic Answering (Automatic/ Manual) Selection	[16]	[NEXT] [NEXT] [SELECT] [MEMORY] [END] [SELECT] — *AUTO ANSWER/MAN ANSWER* [NEXT] — *until the desired extension number appears*

	Default	To make program change															
Extensions	all extensions	11	12	13	14	15	16	17	18	19	20	21	22	23	24	25	26
Automatic	×																
Manual																	

Host PBX Access Codes Assignment	[17]	[NEXT] [NEXT] [A...D] [MEMORY] [END] [A...D] — *up to four outside access codes each with a maximum of 2 digits* [NEXT] — *until the desired CO numbers appears*

CO	Outside access codes of the host PBX			
1				
2				
3				
4				
5				
6				

TO SET	PROGRAM ADDRESS	STEPS REQUIRED TO CHANGE PROGRAM
Preferred CO Line Assignment	[18]	[NEXT] [NEXT] [SELECT] [MEMORY] [END] [SELECT] • • • • *(none)/CO 1/CO 2/CO 3/CO 4/CO 5/CO 6* [NEXT] *until the desired extension number appears*
Programmable Call Waiting	[19]	[NEXT] [NEXT] [SELECT] [MEMORY] [END] [SELECT] *EXT.-OFF, CO-OFF/EXT.-ON, CO-OFF/EXT.-OFF, CO-ON/EXT.-ON, CO-ON* [NEXT] *until the desired extension number appears*
Delayed Ringing Assignment	[20]	[NEXT] [NEXT] [A...F] [MEMORY] [END] [A...F] *dial the CO number* [NEXT] *until the desired extension number appears*
Delayed Ringing Count Selection	[21]	[NEXT] [SELECT] [MEMORY] [END] [SELECT] *AFTER 1 RING/AFTER 2 RINGS/AFTER 3 RINGS/AFTER 4 RINGS*
Intercom Alerting Mode	[22]	[NEXT] [NEXT] [SELECT] [MEMORY] [END] [SELECT] *TONE CALL/VOICE CALL* [NEXT] *until the desired extension number appears*
Programmable Doorphone	[23]	[NEXT] [NEXT] [SELECT] [MEMORY] [END] [SELECT] *D-PHONE 1, 2/1/2/ • • • (deny the ringing)* [NEXT] *until the desired extension number appears*

Extensions	Default: all extensions	To make program change: 11	12	13	14	15	16	17	18	19	20	21	22	23	24	25	26
• • • • (none)	×																
CO 1																	
CO 2																	
CO 3																	
CO 4																	
CO 5																	
CO 6																	

Extensions	Default: all extensions	To make program change: 11	12	13	14	15	16	17	18	19	20	21	22	23	24	25	26
EXT.-OFF, CO-OFF	×																
EXT.-ON, CO-OFF																	
EXT.-OFF, CO-ON																	
EXT.-ON, CO-ON																	

Extensions	Default: all extensions	To make program change: 11	12	13	14	15	16	17	18	19	20	21	22	23	24	25	26
• • • (none)	×																
CO 1																	
CO 2																	
CO 3																	
CO 4																	
CO 5																	
CO 6																	

	Default	To make program change
After 1 ring		
After 2 rings	×	
After 3 rings		
After 4 rings		

Extensions	Default: all extensions	To make program change: 11	12	13	14	15	16	17	18	19	20	21	22	23	24	25	26
Tone call	×																
Voice call																	

Extensions	Default: all extensions	To make program change: 11	12	13	14	15	16	17	18	19	20	21	22	23	24	25	26
Doorphone 1	×																
Doorphone 2	×																
Deny the ringing																	

TO SET / *PROGRAM ADDRESS* / *STEPS REQUIRED TO CHANGE PROGRAM*

Dial Call Pickup Group Assignment — [24]

[NEXT] [NEXT] [A...D] [MEMORY] [END]

- [A...D] ------ *dial the pickup group number*
- [NEXT] --- *until the desired extension number appears*

	Default	*To make program change*															
Extensions	*all extensions*	*11*	*12*	*13*	*14*	*15*	*16*	*17*	*18*	*19*	*20*	*21*	*22*	*23*	*24*	*25*	*26*
Pickup Group 1	×																
Pickup Group 2																	
Pickup Group 3																	
Pickup Group 4																	

Account Code Input Mode — [25]

[NEXT] [NEXT] [SELECT] [MEMORY] [END]

- [SELECT] ----- *OPTION/FORCED*
- [NEXT] --- *until the desired extension number appears*

	Default	*To make program change*															
Extensions	*all extensions*	*11*	*12*	*13*	*14*	*15*	*16*	*17*	*18*	*19*	*20*	*21*	*22*	*23*	*24*	*25*	*26*
Option	×																
Forced																	

Duration Time Count Start Mode — [26]

[NEXT] [SELECT] [MEMORY] [END]

- [SELECT] --- *INSTANTLY/5S AFTER DIAL/10S AFTER DIAL*

	Default	*To make program change*
Instantly		
5S after dial	×	
10S after dial		

SMDR Communication Parameters — [27]

(Carriage return for a new line)

[NEXT][SELECT][MEMORY]

- [SELECT] ---- *CR+LF/CR*

	Default	*To make program change*
CR+LF	×	
CR		

(Baud rate)

[NEXT][SELECT][MEMORY]

- [SELECT] ---- *110B/150B/300B/600B/1200B/2400B/4800B/9600B*

	110B	*150B*	*300B*	*600B*	*1200B*	*2400B*	*4800B*	*9600B*
Default					×			
To make program change								

(Word length)

[NEXT][SELECT][MEMORY]

- [SELECT] ---- *7 BITS/8 BITS*

	Default	*To make program change*
7 BITS	×	
8 BITS		

(Parity)

[NEXT][SELECT][MEMORY]

- [SELECT] ---- *NONE/MARK/SPACE/EVEN/ODD*

	None	*Mark*	*Space*	*Even*	*Odd*
Default		×			
To make program change					

<table>
<tr><th>TO SET</th><th>PROGRAM ADDRESS</th><th>STEPS REQUIRED TO CHANGE PROGRAM</th></tr>
<tr><td>SMDR Communication Parameters</td><td></td><td>
(Stop bit length)
[NEXT][SELECT][MEMORY]
└------ 1 BIT/2 BITS
<table>
<tr><th></th><th>Default</th><th>To make program change</th></tr>
<tr><td>1 BIT</td><td>×</td><td></td></tr>
<tr><td>2 BITS</td><td></td><td></td></tr>
</table>
(Page length)
[NEXT][AB][MEMORY]
└-------- 4 through 99 lines
<table>
<tr><th></th><th>Default</th><th>To make program change</th></tr>
<tr><td>Lines per page</td><td>66</td><td></td></tr>
</table>
(Skip perforation)
[NEXT][AB][MEMORY][END]
└--------- 0 through 95 lines
<table>
<tr><th></th><th>Default</th><th>To make program change</th></tr>
<tr><td>Skipping lines</td><td>0</td><td></td></tr>
</table>
</td></tr>
<tr><td>System Data Dump</td><td>[28]</td><td>
•SYSTEM PARA
•SPEED DIAL
•ALL PARA
•STOP OUTPUT

[NEXT][SELECT][MEMORY][END]
└---------- SYSTEM PARA/CO PARA/EXT PARA/SPEED DIAL ALL PARA/STOP OUTPUT

•CO PARA
[NEXT][SELECT][MEMORY][A][END]
└----- dial CO number
└------ until the CO PARA appears

•EXT PARA
[NEXT][SELECT][MEMORY][AB][END]
└----- dial extension number
└------ until the EXT PARA appears
</td></tr>
<tr><td>SMDR Incoming/ Outgoing Selection</td><td>[29]</td><td>
[NEXT][SELECT][MEMORY][NEXT][SELECT][MEMORY][END]
└--- OUTGOING: ON/OFF └----- INCOMING: ON/OFF
<table>
<tr><th rowspan="2"></th><th colspan="2">Outgoing</th><th colspan="2">Incoming</th></tr>
<tr><th>ON</th><th>OFF</th><th>ON</th><th>OFF</th></tr>
<tr><td>Default</td><td>×</td><td></td><td>×</td><td></td></tr>
<tr><td>To make program change</td><td></td><td></td><td></td><td></td></tr>
</table>
</td></tr>
</table>

TO SET / PROGRAM ADDRESS / STEPS REQUIRED TO CHANGE PROGRAM

Hold Time Reminder — [30]

[NEXT] [SELECT] [MEMORY] [END]

[SELECT] ------ *1 MIN/2 MIN...../9 MIN*

	minutes								
	1	*2*	*3*	*4*	*5*	*6*	*7*	*8*	*9*
Default			×						
To make program change									

Hold Recall Time Set — [31]

[NEXT] [SELECT] [MEMORY] [END]

[SELECT] ------- *30 SEC/1 MIN/1.5 MIN/2 MIN/DISABLE*

	30 seconds	*1 minute*	*1 minute 30 seconds*	*2 minutes*	*disable*
Default	×				
To make program change					

Programmable External Paging Access Tone — [32]

[NEXT] [SELECT] [MEMORY] [END]

[SELECT] ------- *ENABLE/DISABLE*

	Default	*To make program change*
Enable	×	
Disable		

Programmable secret Speed Dial — [33]

[NEXT] [SELECT] [MEMORY] [END]

[SELECT] --- *NO SECRET/ SECRET*

	Default	*To make program change*
No secret	×	
Secret		

Hookswitch Flash Timing — [34]

[NEXT] [NEXT] [SELECT] [MEMORY] [END]

[NEXT] ----*300 MS/600 MS/900 MS*

[SELECT] ----- *until the desired CO number appears*

	Default	*To make program change*					
CO(s)	*all CO's*	*1*	*2*	*3*	*4*	*5*	*6*
300 msec							
600 msec	×						
900 msec							

Disconnect Time — [35]

[NEXT] [NEXT] [SELECT] [MEMORY] [END]

[NEXT] ---- *1.5 SEC/4.0 SEC*

[SELECT] -- *until the desired CO number appears*

	Default	*To make program change*					
CO(s)	*all CO's*	*1*	*2*	*3*	*4*	*5*	*6*
1.5 sec	×						
4.0 sec							

Calling Party Control (CPC) Signal — [36]

[NEXT] [NEXT] [SELECT] [MEMORY] [END]

[NEXT] ------ *ENABLE/DISABLE*

[SELECT] --- *until the desired CO number appears*

	Default	*To make program change*					
CO(s)	*all CO's*	*1*	*2*	*3*	*4*	*5*	*6*
Enable	×						
Disable							

<table>
<tr><th>TO SET</th><th>PROGRAM ADDRESS</th><th>STEPS REQUIRED TO CHANGE PROGRAM</th></tr>
<tr><td>DSS Button Mode</td><td>[37]</td><td>[NEXT] [SELECT] [MEMORY] [END]
└----- WITHOUT TRANSFER/WITH TRANSFER
<table><tr><th></th><th>Default</th><th>To make program change</th></tr><tr><td>Without transfer</td><td>×</td><td></td></tr><tr><td>With transfer</td><td></td><td></td></tr></table></td></tr>
<tr><td>DTMF Receiver Check</td><td>[38]</td><td>[NEXT] [SELECT] [MEMORY] [END]
└---- ENABLE/DISABLE
└-- until the desired DTMF receiver appears
<table><tr><th></th><th>Default</th><th colspan="2">To make program change</th></tr><tr><td>DTMF receiver</td><td>1, 2</td><td>1</td><td>2</td></tr><tr><td>Enable</td><td>×</td><td></td><td></td></tr><tr><td>Disable</td><td></td><td></td><td></td></tr></table></td></tr>
<tr><td>Transfer Recall Time</td><td>[39]</td><td>[NEXT] [SELECT] [MEMORY] [END]
└----- 30 SEC/15 SEC
<table><tr><th></th><th>Default</th><th>To make program change</th></tr><tr><td>30 sec</td><td>×</td><td></td></tr><tr><td>15 sec</td><td></td><td></td></tr></table></td></tr>
<tr><td>M3/FWD Selection</td><td>[40]</td><td>[NEXT][NEXT][SELECT][MEMORY][END]
└----FEATURE KEY/FWD, DND KEY
└-- until the desired extension number appears
<table><tr><th></th><th>Default</th><th colspan="16">To make program change</th></tr><tr><td>Extensions</td><td>all extensions</td><td>11</td><td>12</td><td>13</td><td>14</td><td>15</td><td>16</td><td>17</td><td>18</td><td>19</td><td>20</td><td>21</td><td>22</td><td>23</td><td>24</td><td>25</td><td>26</td></tr><tr><td>Feature key</td><td>×</td><td></td><td></td><td></td><td></td><td></td><td></td><td></td><td></td><td></td><td></td><td></td><td></td><td></td><td></td><td></td><td></td></tr><tr><td>FWD/DND key</td><td></td><td></td><td></td><td></td><td></td><td></td><td></td><td></td><td></td><td></td><td></td><td></td><td></td><td></td><td></td><td></td><td></td></tr></table></td></tr>
<tr><td>Station Program Clear</td><td>[98]</td><td>[NEXT][MEMORY][END]</td></tr>
<tr><td>System Clear</td><td>[99]</td><td>[NEXT][MEMORY][END]</td></tr>
</table>

IC I/O DATA

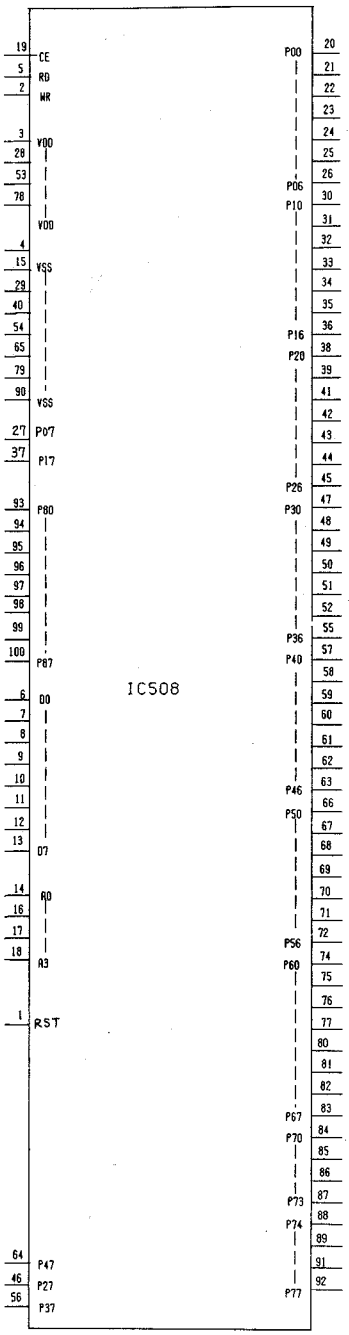
IC508
19 CE
5 RD
2 WR
3 VDD
28
53
78
VDD
4 VSS
15
29
40
54
65
79
90
VSS
27 P07
37 P17
93 P80
94
95
96
97
98
99
100 P87
6 D0
7
8
9
10
11
12
13 D7
14 A0
16
17
18 A3
1 RST
64 P47
46 P27
56 P37
P00 20
21
22
23
24
25
P06 26
P10 30
31
32
33
34
35
P16 36
P20 38
39
41
42
43
44
P26 45
P30 47
48
49
50
51
52
P36 55
P40 57
58
59
60
61
62
P46 63
P50 66
67
68
69
70
71
P56 72
P60 74
75
76
77
80
81
82
P67 83
P70 84
85
86
P73 87
P74 88
89
91
P77 92

IC508

Port	Pin No.	I/O	Signal Name	High Imp.	High Level	Low Level	Remarks
P00	20	O	SH1: CO Amp Shunt Control	Non Shunt	Non Shunt	Shunt	
P01	21	O	MT1: CO Amp Mute Contol	Mute	Mute	Non Mute	
P02	22	O	HD1: CO Amp Hold Tone Control	Non Transmission	Non Transmission	Transmission	
P03	23	O	CF1: CO Amp Conference	Non Conference	Non Conference	Conference	
P04	24	O	DL1: Line Close, Dial Transmission	Break	Break	Make	
P05	25	O	DS1: Spark Erase Relay Control	Break	Break	Make	(RSVD)
P06	26	I	BELL1: Bell, CPC Input	----	No Bell, Line Break	Bell, Line Make	
P07	27	I	SID: DTMF Signal Detection 1	----	----	----	
P10	30	O	SH2: CO Amp Shunt Control	Non Shunt	Non Shunt	Shunt	
P11	31	O	MT2: CO Amp Mute Contol	Mute	Mute	Non Mute	
P12	32	O	HD2: CO Amp Hold Tone Control	Non Transmission	Non Transmission	Transmission	
P13	33	O	CF2: CO Amp Conference	Non Conference	Non Conference	Conference	
P14	34	O	DL2: Line Close, Dial Transmission	Break	Break	Make	
P15	35	O	DS2: Spark Erase Relay Control	Break	Break	Make	(RSVD)
P16	36	I	BELL2: Bell, CPC Input	----	No Bell, Line Break	Bell, Line Make	
P17	37	I	SID: DTMF Signal Detection 2	----	----	----	
P20	38	O	SH3: CO Amp Shunt Control	Non Shunt	Non Shunt	Shunt	
P21	39	O	MT3: CO Amp Mute Contol	Mute	Mute	Non Mute	
P22	41	O	HD3: CO Amp Hold Tone Control	Non Transmission	Non Transmission	Transmission	
P23	42	O	CF3: CO Amp Conference	Non Conference	Non Conference	Conference	
P24	43	O	DL3: Line Close, Dial Transmission	Break	Break	Make	
P25	44	O	DS3: Spark Erase Relay Control	Break	Break	Make	(RSVD)
P26	45	I	BELL3: Bell, CPC Input	----	No Bell, Break	Bell, Make	
P27	46	O	DAY: Day Mode LED Control	Lights-out	Lights-out	Lighting	
P30	47	O	SH4: CO Amp Shunt Control	Non Shunt	Non Shunt	Shunt	
P31	48	O	MT4: CO Amp Mute Contol	Mute	Mute	Non Mute	
P32	49	O	HD4: CO Amp Hold Tone Control	Non Transmission	Non Transmission	Transmission	
P33	50	O	CF4: CO Amp Conference	Non Conference	Non Conference	Conference	
P34	51	O	DL4: Line Close, Dial Transmission	Break	Break	Make	
P35	52	O	DS4: Spark Erase Relay Control	Break	Break	Make	(RSVD)
P36	55	I	BELL4: Bell, CPC Input	----	No Bell, Line Break	Bell, Line Make	
P37	56	O	NIGHT: Night Mode LED Control	Lights-out	Lights-out	Lighting	
P40	57	O	SH5: CO Amp Shunt Control	Non Shunt	Non Shunt	Shunt	
P41	58	O	MT5: CO Amp Mute Contol	Mute	Mute	Non Mute	
P42	59	O	HD5: CO Amp Hold Tone Control	Non Transmission	Non Transmission	Transmission	
P43	60	O	CF5: CO Amp Conference	Non Conference	Non Conference	Conference	
P44	61	O	DL5: Line Close, Dial Transmission	Break	Break	Make	
P45	62	O	DS5: Spark Erase Relay Control	Break	Break	Make	(RSVD)
P46	63	I	BELL5: Bell, CPC Input	----	No Bell, Line Break	Bell, Line Make	
P47	64	O	PD RLY: Power Failure Control	Break	Break	Make	
P50	66	O	SH6: CO Amp Shunt Control	Non Shunt	Non Shunt	Shunt	
P51	67	O	MT6 CO Amp Mute Contol	Mute	Mute	Non Mute	
P52	68	O	HD6: CO Amp Hold Tone Control	Non Transmission	Non Transmission	Transmission	
P53	69	O	CF6: CO Amp Conference	Non Conference	Non Conference	Conference	
P54	70	O	DL6: Line Close, Dial Transmission	Break	Break	Make	
P55	71	O	DS6: Spark Erase Relay Control	Break	Break	Make	(RSVD)
P56	72	I	BELL6: Bell, CPC Input	----	No Bell, Line Break	Bell, Line Make	
P57	73	—	Not Used	----	----	----	
P60	74	O	TA0: Cross Point Data	Data Low	Data Low	Data High	
P61	75	O	TA1: Cross Point Data	Data Low	Data Low	Data High	
P62	76	O	TA2: Cross Point Data	Data Low	Data Low	Data High	
P63	77	O	TA3: Cross Point Data	Data Low	Data Low	Data High	
P64	78	O	TA4: Cross Point Data	Data Low	Data Low	Data High	
P65	81	O	TA5: Cross Point Data	Data Low	Data Low	Data High	
P66	82	O	TA6: Cross Point Data	Data Low	Data Low	Data High	
P67	83	O	TA7: Cross Point Data	Data Low	Data Low	Data High	

IC508

Port	Pin No.	I/O	Signal Name	High Imp.	High Level	Low Level	Remarks
P70	84	O	A: Cross Point Address	Address Low	Address Low	Address High	
P71	85	O	B: Cross Point Address	Address Low	Address Low	Address High	
P72	86	O	C: Cross Point Address	Address Low	Address Low	Address High	
P73	87	O	D: Cross Point Address	Address Low	Address Low	Address High	
P74	88	O	STB1: Cross Point Strobe	Strobe Low	Strobe Low	Strobe High	
P75	89	O	STB2: Cross Point Strobe	Strobe Low	Strobe Low	Strobe High	
P76	91	O	STB3: Cross Point Strobe	Strobe Low	Strobe Low	Strobe High	
P77	92	O	STB4: Cross Point Strobe	Strobe Low	Strobe Low	Strobe High	
P80	93	O	ROW1: PB Signal Generator, 1 Line	Uncertainty	High	Low	
P81	94	O	ROW2: PB Signal Generator, 2 Line	Uncertainty	High	Low	
P82	95	O	ROW3: PB Signal Generator, 3 Line	Uncertainty	High	Low	
P83	96	O	ROW4: PB Signal Generator, 4 Line	Uncertainty	High	Low	
P84	97	O	COL1: PB Signal Generator, 1 Row	Uncertainty	High	Low	
P85	98	O	COL2: PB Signal Generator, 2 Row	Uncertainty	High	Low	
P86	99	O	COL3: PB Signal Generator, 3 Row	Uncertainty	High	Low	
P87	100	O	COL4: PB Signal Generator, 4 Row	Uncertainty	High	Low	

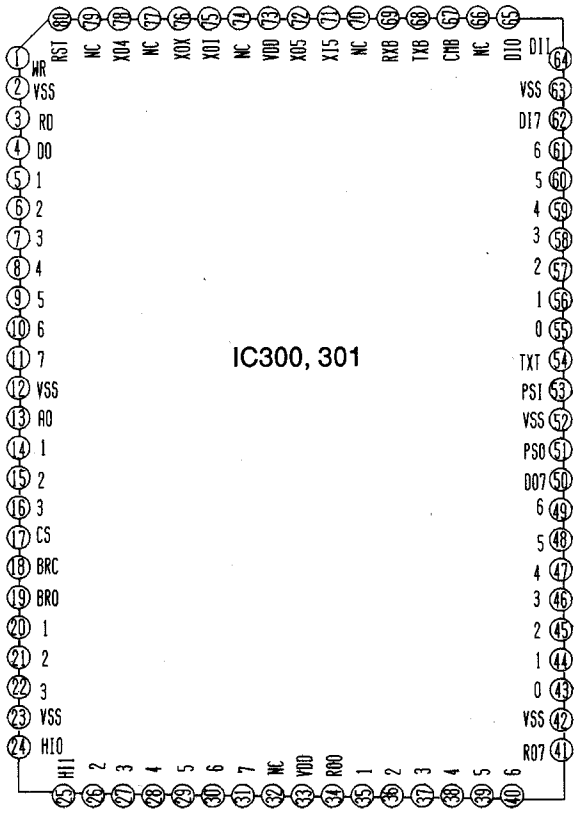

IC300

Port	Pin No.	I/O	Signal Name	High Imp.	High Level	Low Level	Remarkes
HI0	24	I	HK11: EXT. Telephone Hook Detection	----	On-Hook	Off-Hook	Pull-up by 2.2kΩ
HI1	25	I	HK12: EXT. Telephone Hook Detection	----	On-Hook	Off-Hook	Pull-up by 2.2kΩ
HI2	26	I	HK13: EXT. Telephone Hook Detection	----	On-Hook	Off-Hook	Pull-up by 2.2kΩ
HI3	27	I	HK14: EXT. Telephone Hook Detection	----	On-Hook	Off-Hook	Pull-up by 2.2kΩ
HI4	28	I	HK15: EXT. Telephone Hook Detection	----	On-Hook	Off-Hook	Pull-up by 2.2kΩ
HI5	29	I	HK16: EXT. Telephone Hook Detection	----	On-Hook	Off-Hook	Pull-up by 2.2kΩ
HI6	30	I	HK17: EXT. Telephone Hook Detection	----	On-Hook	Off-Hook	Pull-up by 2.2kΩ
HI7	31	I	HK18: EXT. Telephone Hook Detection	----	On-Hook	Off-Hook	Pull-up by 2.2kΩ
RO0	34	O	RG11: Extension Ring Relay Control	Bell Transmission	Bell Transmission	Non-Bell Transmission	
RO1	35	O	RG12: Extension Ring Relay Control	Bell Transmission	Bell Transmission	Non-Bell Transmission	
RO2	36	O	RG13: Extension Ring Relay Control	Bell Transmission	Bell Transmission	Non-Bell Transmission	
RO3	37	O	RG14: Extension Ring Relay Control	Bell Transmission	Bell Transmission	Non-Bell Transmission	
RO4	38	O	RG15: Extension Ring Relay Control	Bell Transmission	Bell Transmission	Non-Bell Transmission	
RO5	39	O	RG16: Extension Ring Relay Control	Bell Transmission	Bell Transmission	Non-Bell Transmission	
RO6	40	O	RG17: Extension Ring Relay Control	Bell Transmission	Bell Transmission	Non-Bell Transmission	
RO7	41	O	RG18: Extension Ring Relay Control	Bell Transmission	Bell Transmission	Non-Bell Transmission	
DO0	43	O	TXD11: EMSS Tel. Data Transmission	Non-Transmission	Non-Transmission	Transmission	
DO1	44	O	TXD12: EMSS Tel. Data Transmission	Non-Transmission	Non-Transmission	Transmission	
DO2	45	O	TXD13: EMSS Tel. Data Transmission	Non-Transmission	Non-Transmission	Transmission	
DO3	46	O	TXD14: EMSS Tel. Data Transmission	Non-Transmission	Non-Transmission	Transmission	
DO4	47	O	TXD15: EMSS Tel. Data Transmission	Non-Transmission	Non-Transmission	Transmission	
DO5	48	O	TXD16: EMSS Tel. Data Transmission	Non-Transmission	Non-Transmission	Transmission	
DO6	49	O	TXD17: EMSS Tel. Data Transmission	Non-Transmission	Non-Transmission	Transmission	
DO7	50	O	TXD18: EMSS Tel. Data Transmission	Non-Transmission	Non-Transmission	Transmission	
DI0	55	I	RXD11: EMSS Tel. Reception Data	----	Non-Data	Data	Pull-up by 1kΩ
DI1	56	I	RXD12: EMSS Tel. Reception Data	----	Non-Data	Data	Pull-up by 1kΩ
DI2	57	I	RXD13: EMSS Tel. Reception Data	----	Non-Data	Data	Pull-up by 1kΩ
DI3	58	I	RXD14: EMSS Tel. Reception Data	----	Non-Data	Data	Pull-up by 1kΩ
DI4	59	I	RXD15: EMSS Tel. Reception Data	----	Non-Data	Data	Pull-up by 1kΩ
DI5	60	I	RXD16: EMSS Tel. Reception Data	----	Non-Data	Data	Pull-up by 1kΩ
DI6	61	I	RXD17: EMSS Tel. Reception Data	----	Non-Data	Data	Pull-up by 1kΩ
DI7	62	I	RXD18: EMSS Tel. Reception Data	----	Non-Data	Data	Pull-up by 1kΩ

IC301

Port	Pin No.	I/O	Signal Name	High Imp.	High Level	Low Level	Remarkes
HI0	24	I	HK19: EXT. Telephone Hook Detection	----	On-Hook	Off-Hook	Pull-up by 2.2kΩ
HI1	25	I	HK20: EXT. Telephone Hook Detection	----	On-Hook	Off-Hook	Pull-up by 2.2kΩ
HI2	26	I	HK21: EXT. Telephone Hook Detection	----	On-Hook	Off-Hook	Pull-up by 2.2kΩ
HI3	27	I	HK22: EXT. Telephone Hook Detection	----	On-Hook	Off-Hook	Pull-up by 2.2kΩ
HI4	28	I	HK23: EXT. Telephone Hook Detection	----	On-Hook	Off-Hook	Pull-up by 2.2kΩ
HI5	29	I	HK24: EXT. Telephone Hook Detection	----	On-Hook	Off-Hook	Pull-up by 2.2kΩ
HI6	30	I	HK25: EXT. Telephone Hook Detection	----	On-Hook	Off-Hook	Pull-up by 2.2kΩ
HI7	31	I	HK26: EXT. Telephone Hook Detection	----	On-Hook	Off-Hook	Pull-up by 2.2kΩ
RO0	34	O	RG19: Extension Ring Relay Control	Bell Transmission	Bell Transmission	Non-Bell Transmission	
RO1	35	O	RG20: Extension Ring Relay Control	Bell Transmission	Bell Transmission	Non-Bell Transmission	
RO2	36	O	RG21: Extension Ring Relay Control	Bell Transmission	Bell Transmission	Non-Bell Transmission	
RO3	37	O	RG22: Extension Ring Relay Control	Bell Transmission	Bell Transmission	Non-Bell Transmission	
RO4	38	O	RG23: Extension Ring Relay Control	Bell Transmission	Bell Transmission	Non-Bell Transmission	
RO5	39	O	RG24: Extension Ring Relay Control	Bell Transmission	Bell Transmission	Non-Bell Transmission	
RO6	40	O	RG25: Extension Ring Relay Control	Bell Transmission	Bell Transmission	Non-Bell Transmission	
RO7	41	O	RG26: Extension Ring Relay Control	Bell Transmission	Bell Transmission	Non-Bell Transmission	
DO0	43	O	TXD19: EMSS Tel. Data Transmission	Non-Transmission	Non-Transmission	Transmission	
DO1	44	O	TXD20: EMSS Tel. Data Transmission	Non-Transmission	Non-Transmission	Transmission	
DO2	45	O	TXD21: EMSS Tel. Data Transmission	Non-Transmission	Non-Transmission	Transmission	
DO3	46	O	TXD22: EMSS Tel. Data Transmission	Non-Transmission	Non-Transmission	Transmission	
DO4	47	O	TXD23: EMSS Tel. Data Transmission	Non-Transmission	Non-Transmission	Transmission	
DO5	48	O	TXD24: EMSS Tel. Data Transmission	Non-Transmission	Non-Transmission	Transmission	
DO6	49	O	TXD25: EMSS Tel. Data Transmission	Non-Transmission	Non-Transmission	Transmission	
DO7	50	O	TXD26: EMSS Tel. Data Transmission	Non-Transmission	Non-Transmission	Transmission	
DI0	55	I	RXD19: EMSS Tel. Reception Data	----	Non-Data	Data	Pull-up by 1kΩ
DI1	56	I	RXD20: EMSS Tel. Reception Data	----	Non-Data	Data	Pull-up by 1kΩ
DI2	57	I	RXD21: EMSS Tel. Reception Data	----	Non-Data	Data	Pull-up by 1kΩ
DI3	58	I	RXD22: EMSS Tel. Reception Data	----	Non-Data	Data	Pull-up by 1kΩ
DI4	59	I	RXD23: EMSS Tel. Reception Data	----	Non-Data	Data	Pull-up by 1kΩ
DI5	60	I	RXD24: EMSS Tel. Reception Data	----	Non-Data	Data	Pull-up by 1kΩ
DI6	61	I	RXD25: EMSS Tel. Reception Data	----	Non-Data	Data	Pull-up by 1kΩ
DI7	62	I	RXD26: EMSS Tel. Reception Data	----	Non-Data	Data	Pull-up by 1kΩ

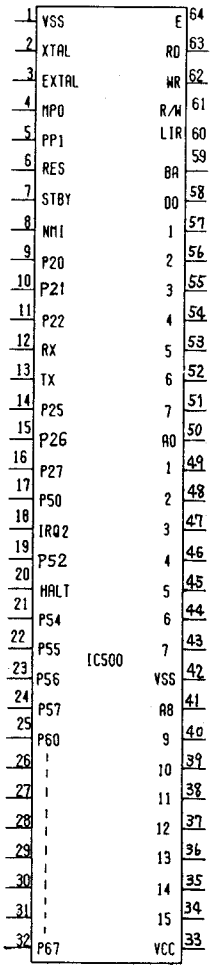

IC500

Port	Pin No.	I/O	Signal Name	High Imp.	High Level	Low Level	Remarks
NMI	8	I	CPU Restart	—	—	—	
P20	9	I	OL1: EXT. Over Current Detection (-)	—	Normal	Over Current	EXT. 19-26
P21	10	I	OL2: EXT. Over Current Detection (+)	—	Over Current	Normal	EXT. 11-18
P22	11	O	BRK1: EXT. Over Current Protection (-)	Break	Break	ON	EXT. 19-26
RX	12	I	RXD	—	—	—	
TX	13	O	TXD	—	—	—	
P25	14	O	BRK2: EXT. Over Current Protection (+)	Break	Break	ON	EXT. 11-18
P26	15	O	BUSY1: Doorphone 1 ON/OFF Control	OFF	OFF	ON	
P27	16	O	BUSY2: Doorphone 2 ON/OFF Control	OFF	OFF	ON	
P50	17	—	———	—	—	—	
IRQ2	18	I	PFD: Power Down Detection	—	Power Down	Normal	
P52	19	I	DROPT: Doorphone Adaptor Connect Detection	Non-Connect	Connect		
HALT	20	I	HALT: Halt Control Input	Normal	Power Down		
P54	21	I	DHK1: Doorphone 1 Hook Detection	On-Hook	Off-Hook		
P55	22	I	DHK2: Doorphone 2 Hook Detection	On-Hook	Off-Hook		
P56	23	I	CNCT1: Doorphone 1 Connect Detection	Connect	Non-Connect		
P57	24	I	CNCT2: Doorphone 2 Connect Detection	Connect	Non-Connect		
P60	25	—	———	—	—	—	
P61	26	O	BANK: Bank Select Control	—	—	—	
P62	27	I	CTS	—	—	—	
P63	28	—	———	—	—	—	
P64	29	I	DSR	—	—	—	
P65	30	I	DTR	—	—	—	
P66	31	O	PF: Power Down Control	—	Power Down	Normal	
P67	32	O	20Hz: Bell Signal Output	—	—	—	

BLOCK DIAGRAM

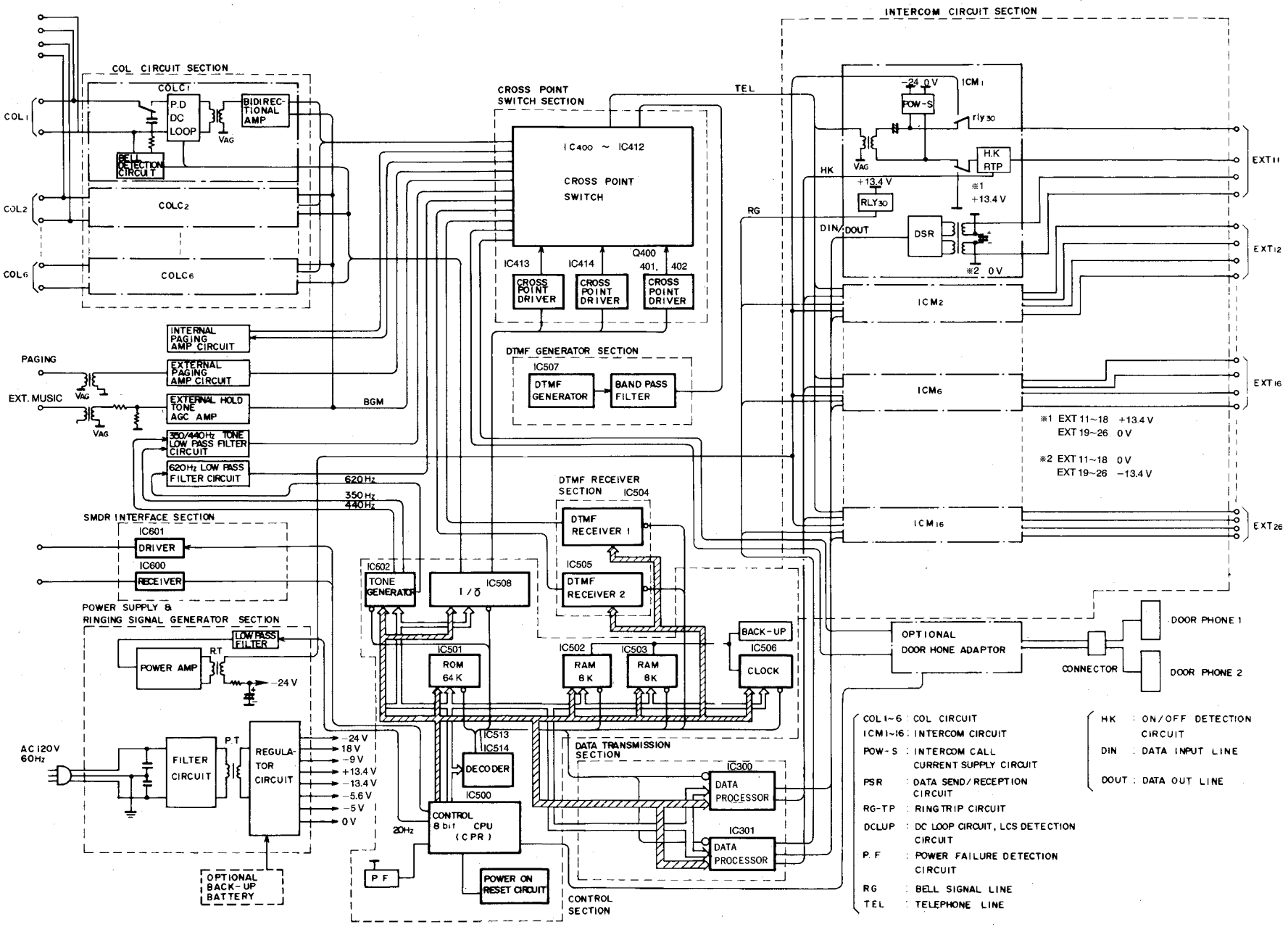

TERMINAL GUIDE OF IC'S, TRANSISTORS AND DIODES

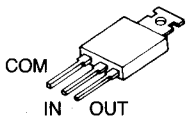

PQVITA7924
PQVITA7812AF

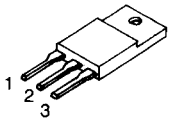

AN7912T

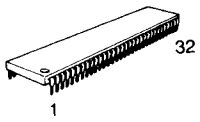

PQVIH63B03XP

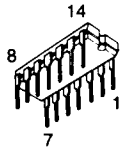

PQVITC7H04P
PQVITC7H08P
PQVIHD75188P
PQVIHD75189P

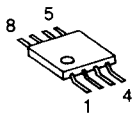

PQVINJM4558M

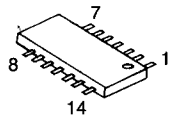

PQVITC4066BF

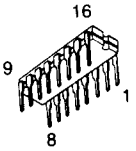

PQVITD62706P
PQVITC7H139P
PQVITC7H138P

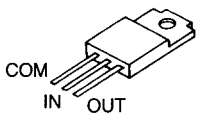

PQVIPC79M18F

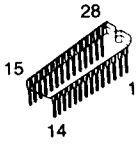

PQVIHM6264LA
PQWIT61610M2

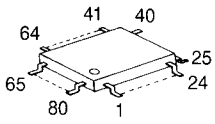

PQVI671152F

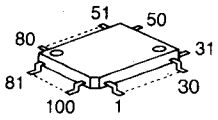

PQVI63HB110

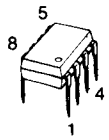

PQVINJM4558D

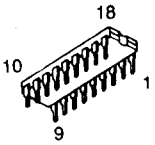

PQVIMT8870BC

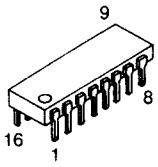

PQVILR4089
PQVIBU3140

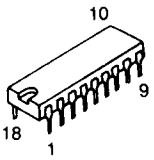

PQVIMS6242BS

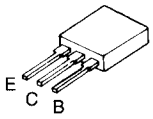

2SA1626

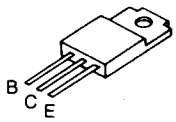

2SB1015
2SD1406

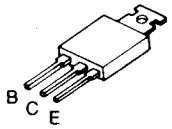

2SB834
2SC2590

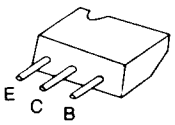

2SA881, 2SB644
2SC2673, 2SD639

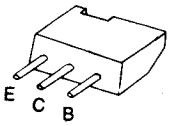

DTA124EA
DTA124XA
DTA143A
DTA144A
2SA937
2SC2021
PQVTDTC114Y

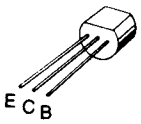

2SC2878

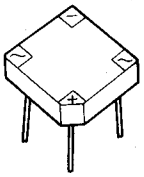

PQVD2B4B41
PQVD3B4B41

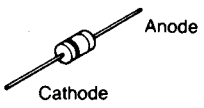

MA4110

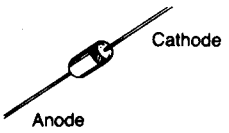

1SS131
1SR35-200
MA4030
PQVDHZS2B1
PQVD1SV124

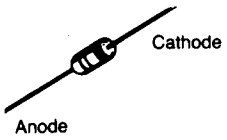

MA1056
MA4036
MA4047
MA4062
MA4091

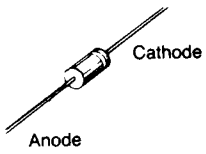

PQVDEK03

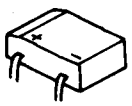

PQVDS1YB40F1

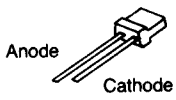

LN220RPH
LN320GPH
LN420YPH

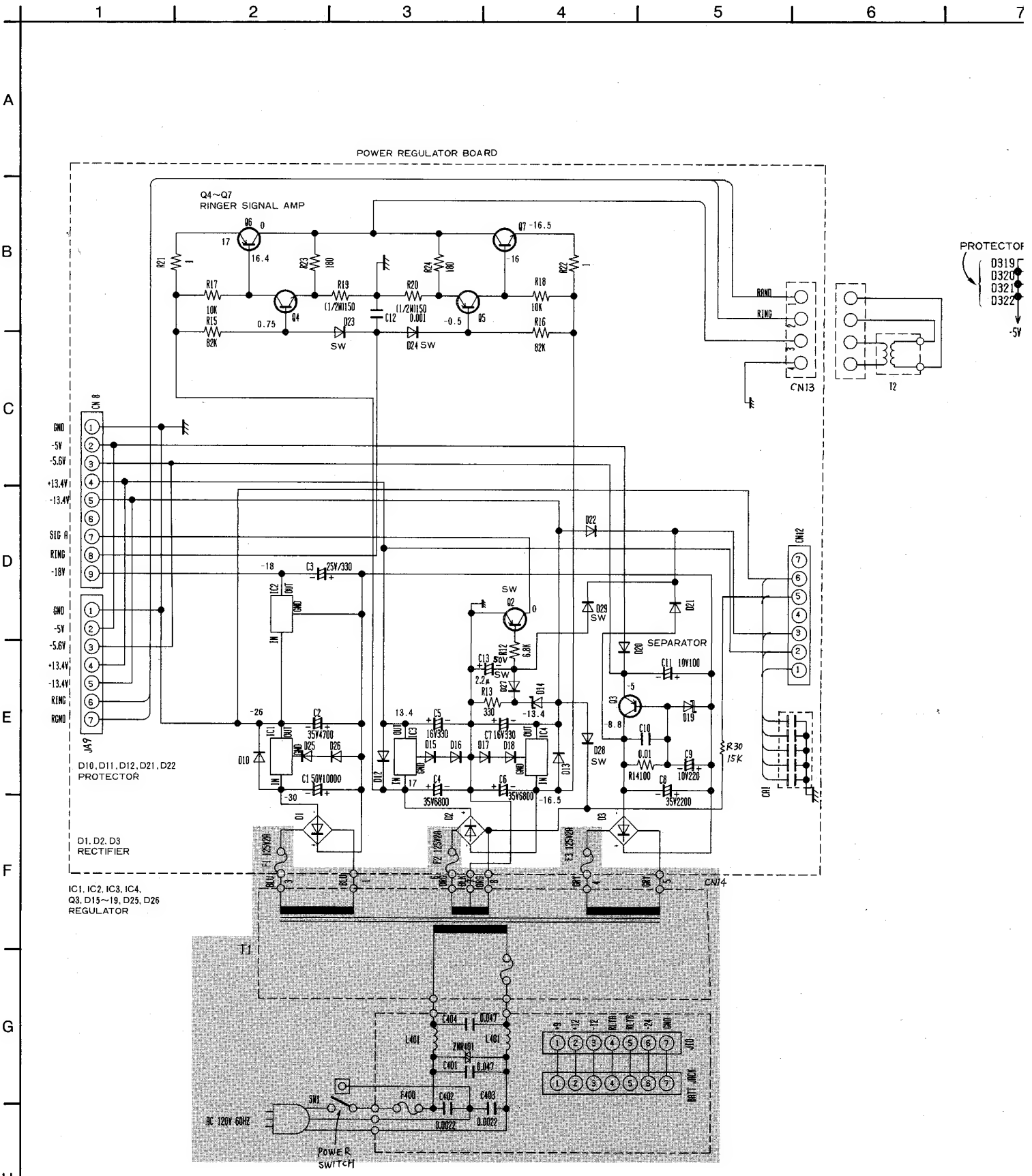
POWER REGULATOR BOARD
Q4~Q7
RINGER SIGNAL AMP
PROTECTOR
D319
D320
D321
D322
-5V
RAND
RING
CN13
T2
CN 8
GND
-5V
-5.6V
+13.4V
-13.4V
SIG A
RING
-18V
GND
-5V
-5.6V
+13.4V
-13.4V
RING
RGND
JA9
D10, D11, D12, D21, D22
PROTECTOR
D1, D2, D3
RECTIFIER
IC1, IC2, IC3, IC4,
Q3, D15~19, D25, D26
REGULATOR
SEPARATOR
CN12
CA1
CN14
T1
AC 120V 60HZ
SW1
F400
POWER
SWITCH
BATT JACK
J10

SCHEMATIC DIAGRAM

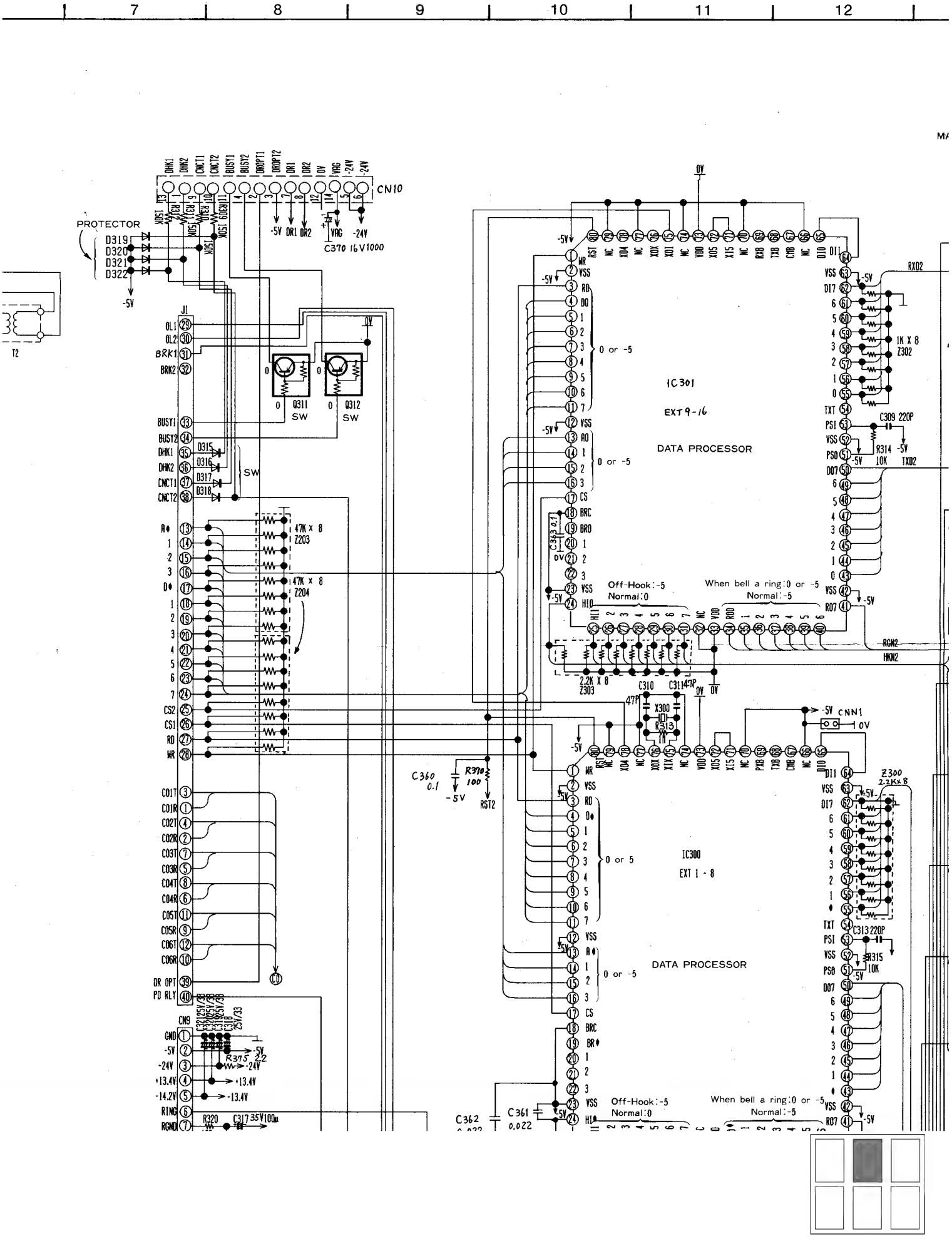

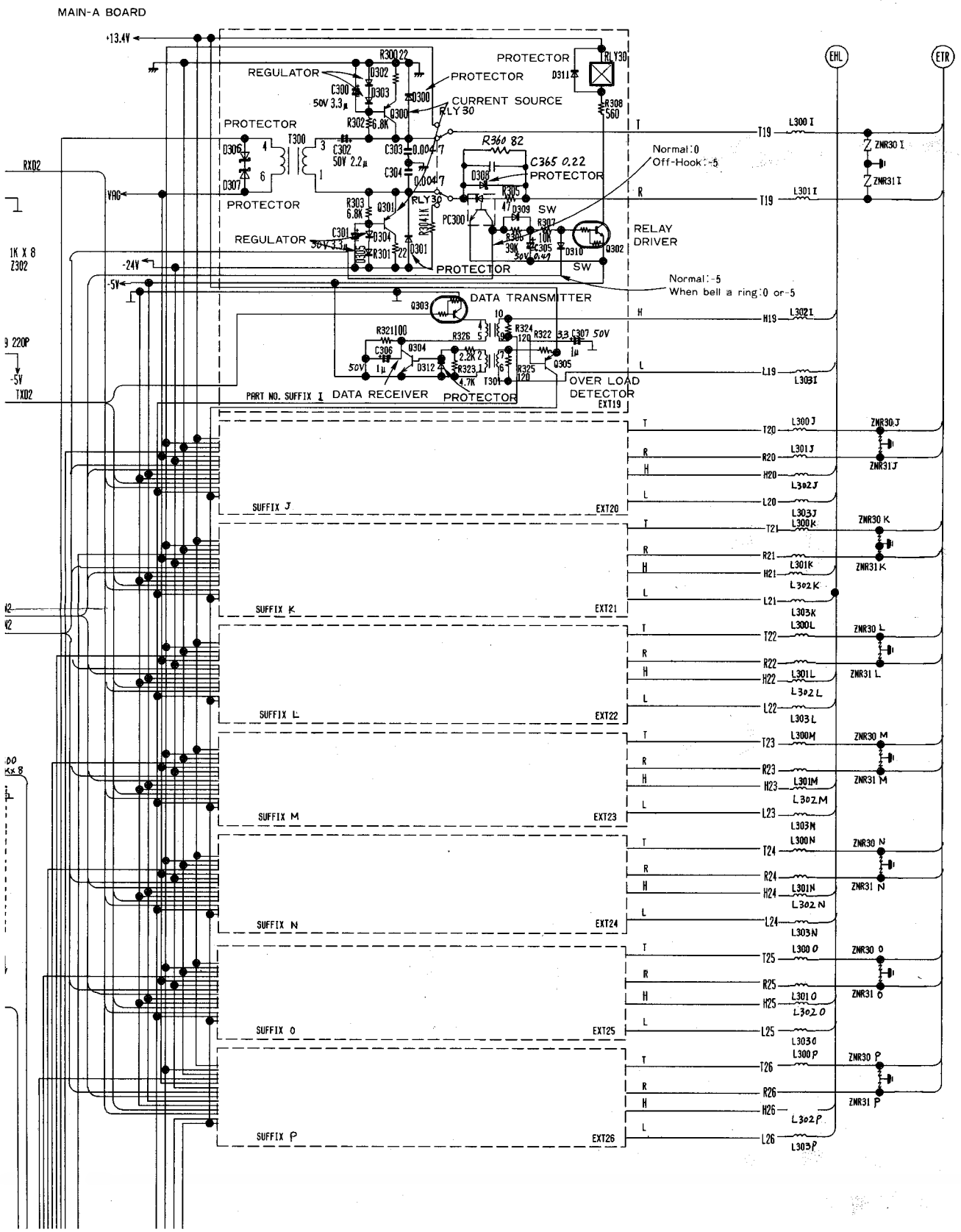
MAIN-A BOARD
+13.4V
REGULATOR
PROTECTOR
CURRENT SOURCE
RLY30
R360 82
C365 0.22
Normal:0
Off-Hook:-5
RELAY DRIVER
Normal:-5
When bell a ring:0 or-5
DATA TRANSMITTER
DATA RECEIVER
OVER LOAD DETECTOR
EXT19
SUFFIX J
EXT20
SUFFIX K
EXT21
SUFFIX L
EXT22
SUFFIX M
EXT23
SUFFIX N
EXT24
SUFFIX O
EXT25
SUFFIX P
EXT26
EHL
ETR
RXD2
TXD2
VAG
-24V
-5V

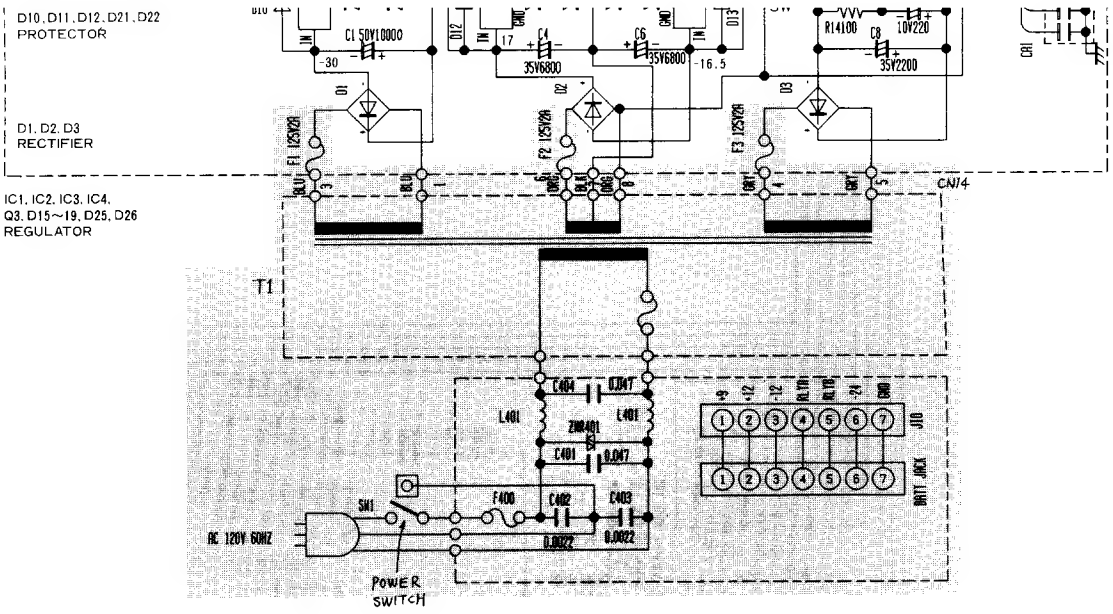

Notes:

1. DC voltage measurements are taken with electronic voltmeter and oscilloscope from ground line.

   (●Power Switch ON condition
   ●Voltage Value: V)

2. This schematic diagram may be modified at any time with the development of new technology.

3. Important safety notice
   The shaded area on this schematic diagram incorporates special features important for protection from fire and electrical shock hazards. When servicing it is essential that only manufacturer's specified parts be used for the critical components in the shaded areas of the schematic.

4. 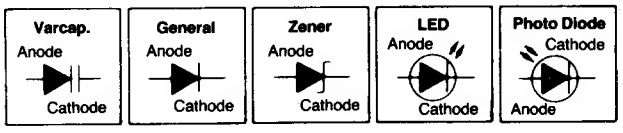

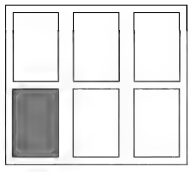

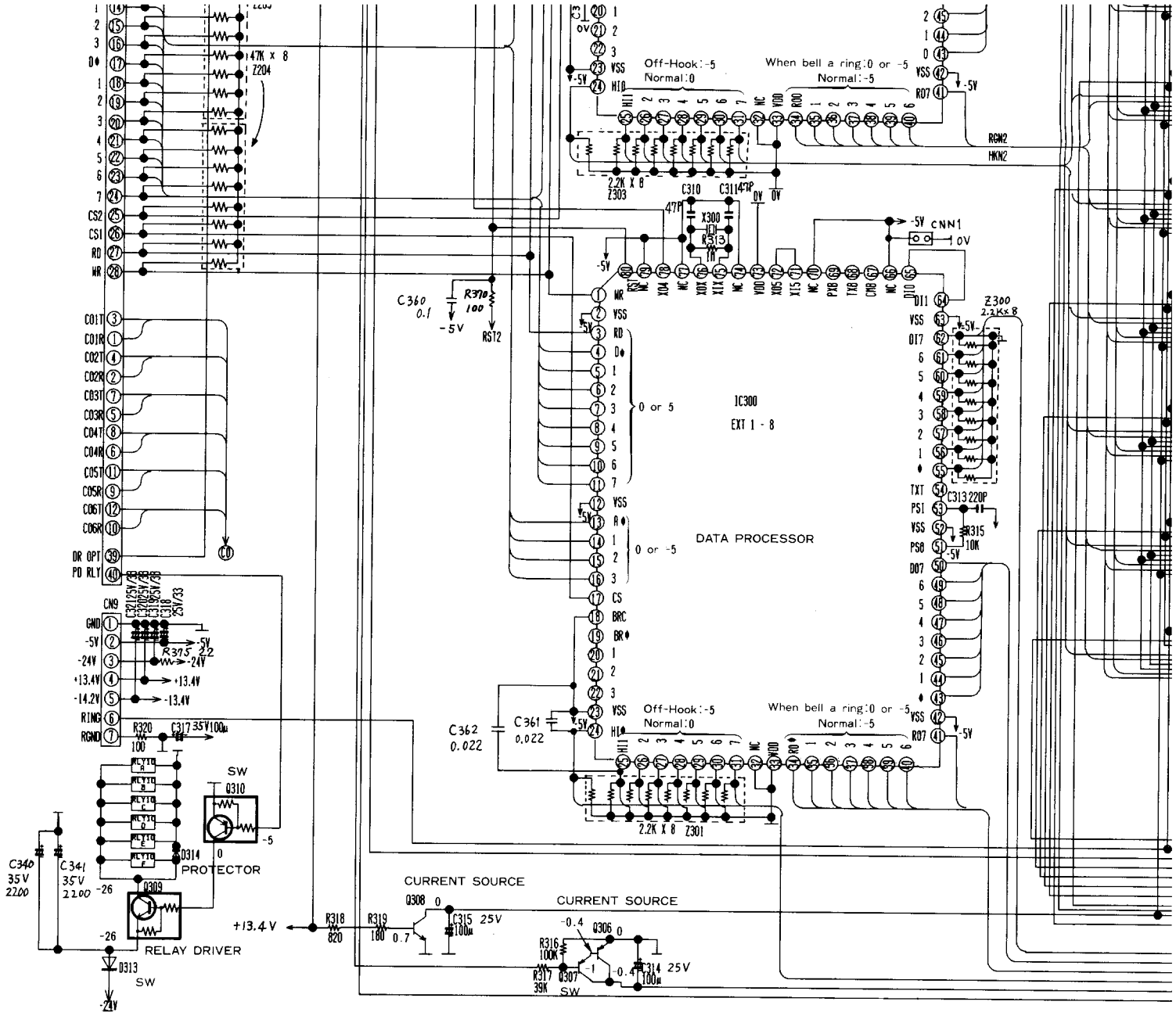

Off-Hook:-5
Normal:0
When bell a ring:0 or -5
Normal:-5
IC300
EXT 1 - 8
DATA PROCESSOR
0 or 5
0 or -5
CURRENT SOURCE
CURRENT SOURCE
PROTECTOR
RELAY DRIVER
SW
SW
SW

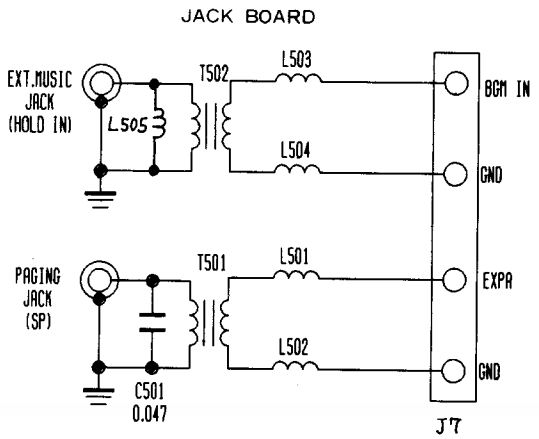

JACK BOARD
EXT.MUSIC JACK (HOLD IN)
PAGING JACK (SP)
T502
T501
L503
L504
L505
L501
L502
C501 0.047
BGM IN
GND
EXPA
GND
J7

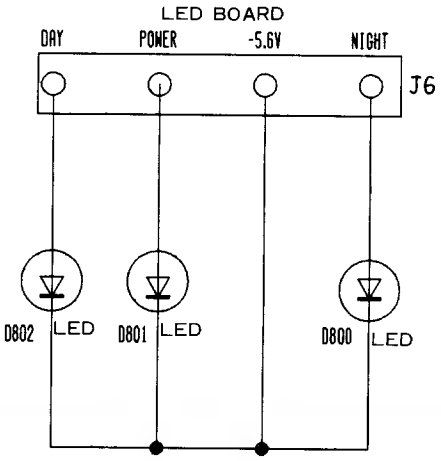

LED BOARD
DAY
POWER
-5.6V
NIGHT
J6
D802 LED
D801 LED
D800 LED

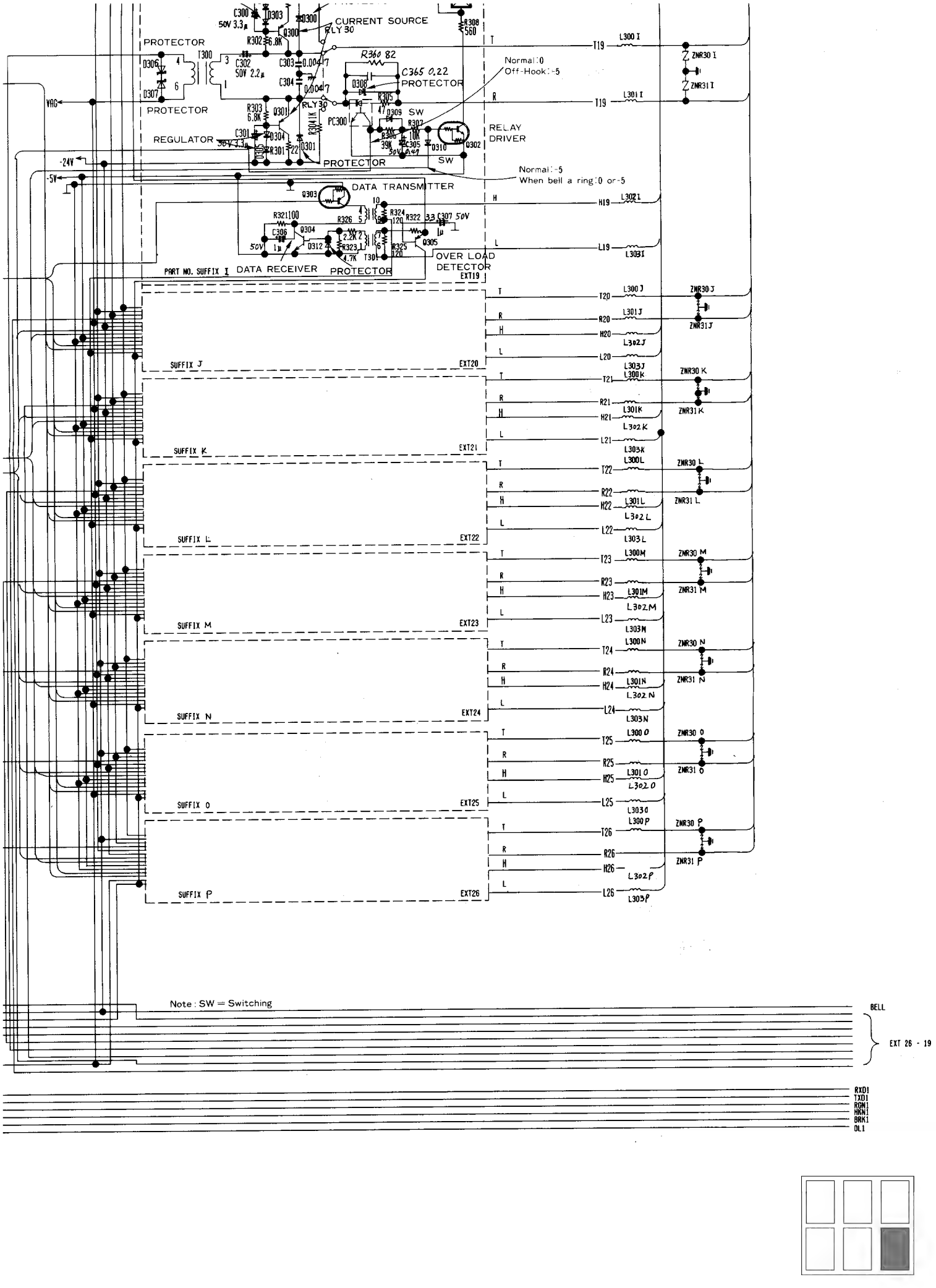
CURRENT SOURCE
RLY 30
PROTECTOR
REGULATOR
RELAY DRIVER
SW
Normal:0
Off-Hook:-5
Normal:-5
When bell a ring:0 or-5
DATA TRANSMITTER
DATA RECEIVER
OVER LOAD DETECTOR
EXT19
SUFFIX J
EXT20
SUFFIX K
EXT21
SUFFIX L
EXT22
SUFFIX M
EXT23
SUFFIX N
EXT24
SUFFIX O
EXT25
SUFFIX P
EXT26
Note : SW = Switching
BELL
EXT 26 - 19
RXD1
TXD1
RGN1
MKN1
BRK1
OL1

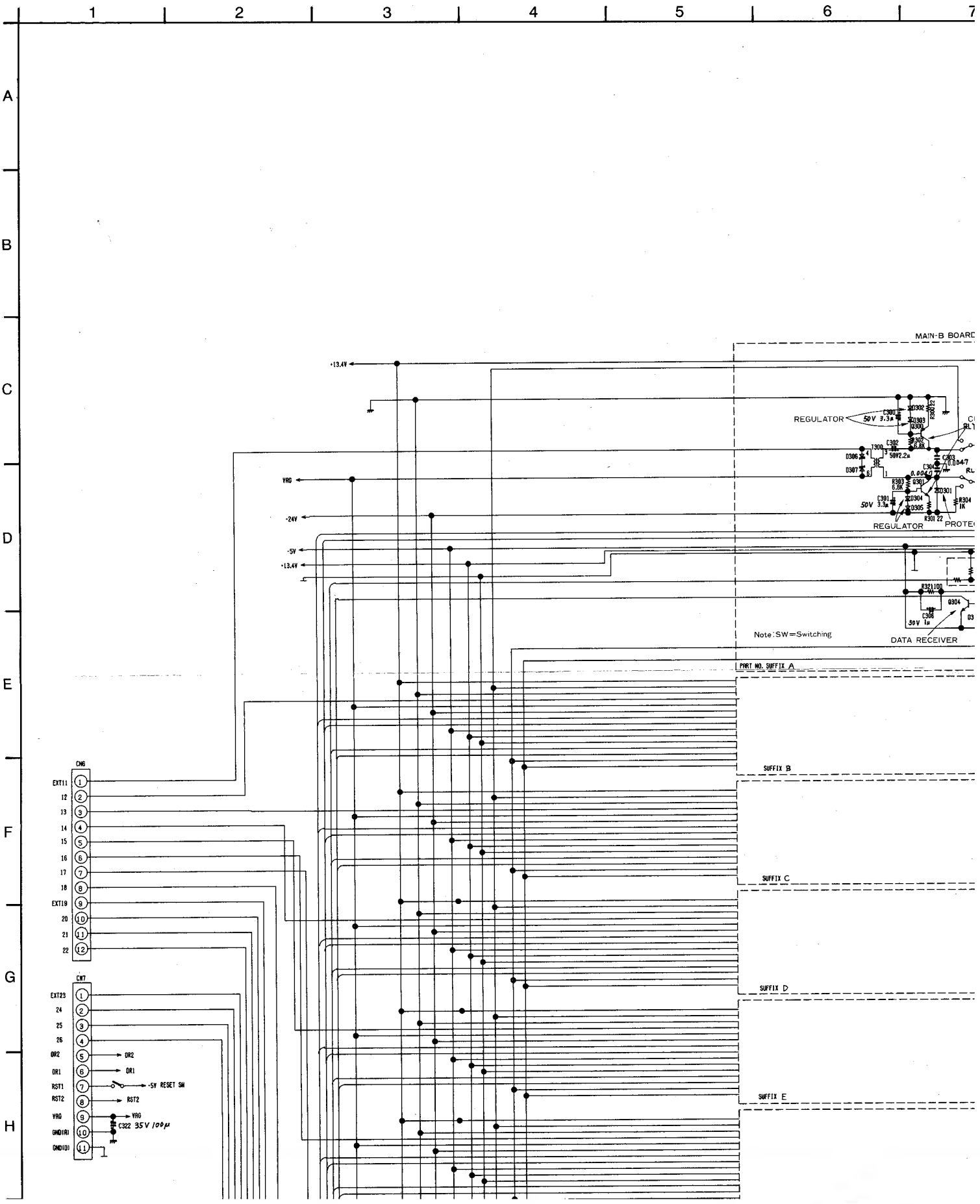
MAIN-B BOARD
+13.4V
VRG
-24V
-5V
+13.4V
REGULATOR
REGULATOR
PROTE
DATA RECEIVER
Note:SW=Switching
PART NO. SUFFIX A
SUFFIX B
SUFFIX C
SUFFIX D
SUFFIX E
CN6
EXT11
12
13
14
15
16
17
18
EXT19
20
21
22
CN7
EXT23
24
25
26
DR2
DR1
RST1
RST2
VRG
GND(R)
GND(D)
DR2
DR1
-5V RESET SW
RST2
VRG
C322 35V 100μ

SCHEMATIC DIAGRAM

7 | 8 | 9 | 10 | 11 | 12 | 13

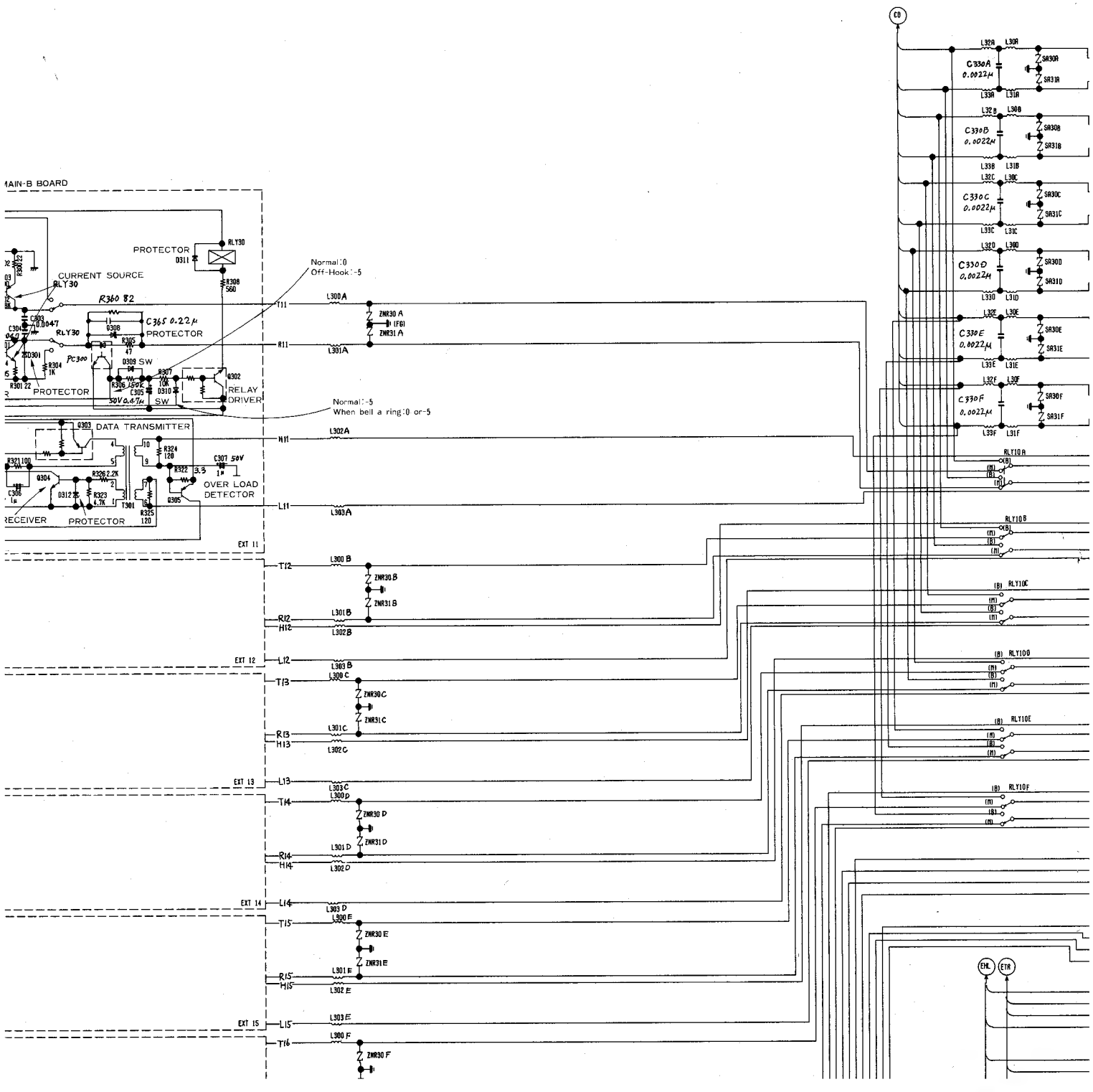

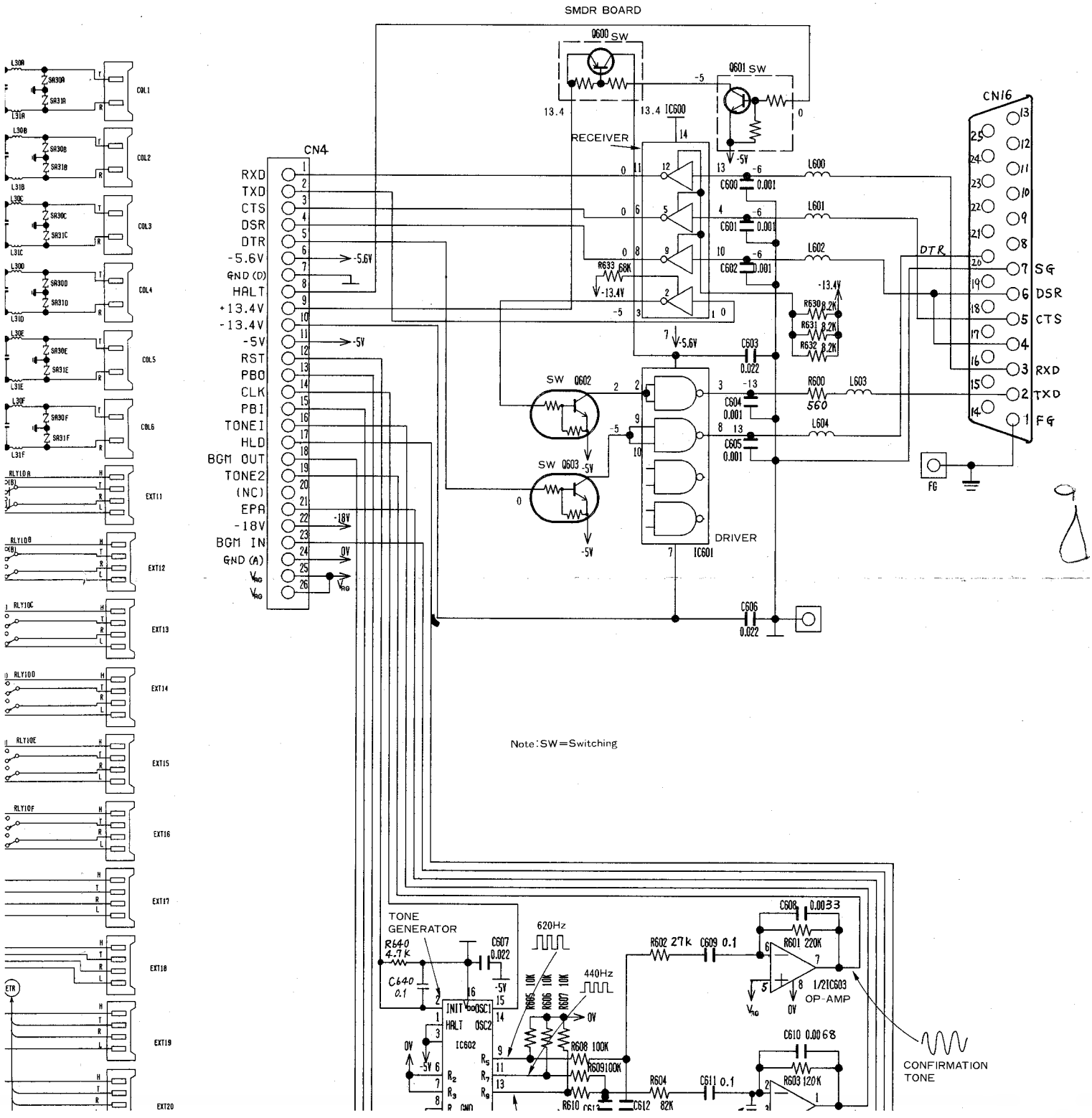
SMDR BOARD
CN4
RXD
TXD
CTS
DSR
DTR
-5.6V
GND (D)
HALT
+13.4V
-13.4V
-5V
RST
PBO
CLK
PBI
TONEI
HLD
BGM OUT
TONE2
(NC)
EPA
-18V
BGM IN
GND (A)
Q600 SW
Q601 SW
13.4
13.4 IC600
RECEIVER
L600
L601
L602
C600 0.001
C601 0.001
C602 0.001
R633 68K
-13.4V
R630 8.2K
R631 8.2K
R632 8.2K
C603 0.022
SW Q602
SW Q603
R600 560
L603
L604
C604 0.001
C605 0.001
DRIVER
IC601
C606 0.022
CN16
SG
DSR
CTS
RXD
TXD
FG
Note:SW=Switching
TONE GENERATOR
R640 4.7K
C640 0.1
C607 0.022
620Hz
440Hz
R605 10K
R606 10K
R607 10K
R608 100K
R609 100K
R610
C612
IC602
INIT
HALT
OSC1
OSC2
R602 27k
C609 0.1
C608 0.0033
R601 220K
1/2IC603
OP-AMP
C610 0.0068
R603 120K
R604 82K
C611 0.1
CONFIRMATION TONE
L30A
SR30A
SR31A
L31A
COL1
L30B
SR30B
SR31B
L31B
COL2
L30C
SR30C
SR31C
L31C
COL3
L30D
SR30D
SR31D
L31D
COL4
L30E
SR30E
SR31E
L31E
COL5
L30F
SR30F
SR31F
L31F
COL6
RLY1DA
EXT11
RLY1DB
EXT12
RLY1DC
EXT13
RLY1DD
EXT14
RLY1DE
EXT15
RLY1DF
EXT16
EXT17
EXT18
ETR
EXT19
EXT20

-5V
+13.4V
Note: SW=Switching
DATA RECEIVER
PART NO. SUFFIX A
SUFFIX B
SUFFIX C
SUFFIX D
SUFFIX E
SUFFIX F
SUFFIX G
SUFFIX H
CN6
EXT11
12
13
14
15
16
17
18
EXT19
20
21
22
CN7
EXT23
24
25
26
DR2
DR1
RST1
RST2
YAG
GND(R)
GND(D)
-5V RESET SW
C322 35V 100μ
EXT19
EXT26

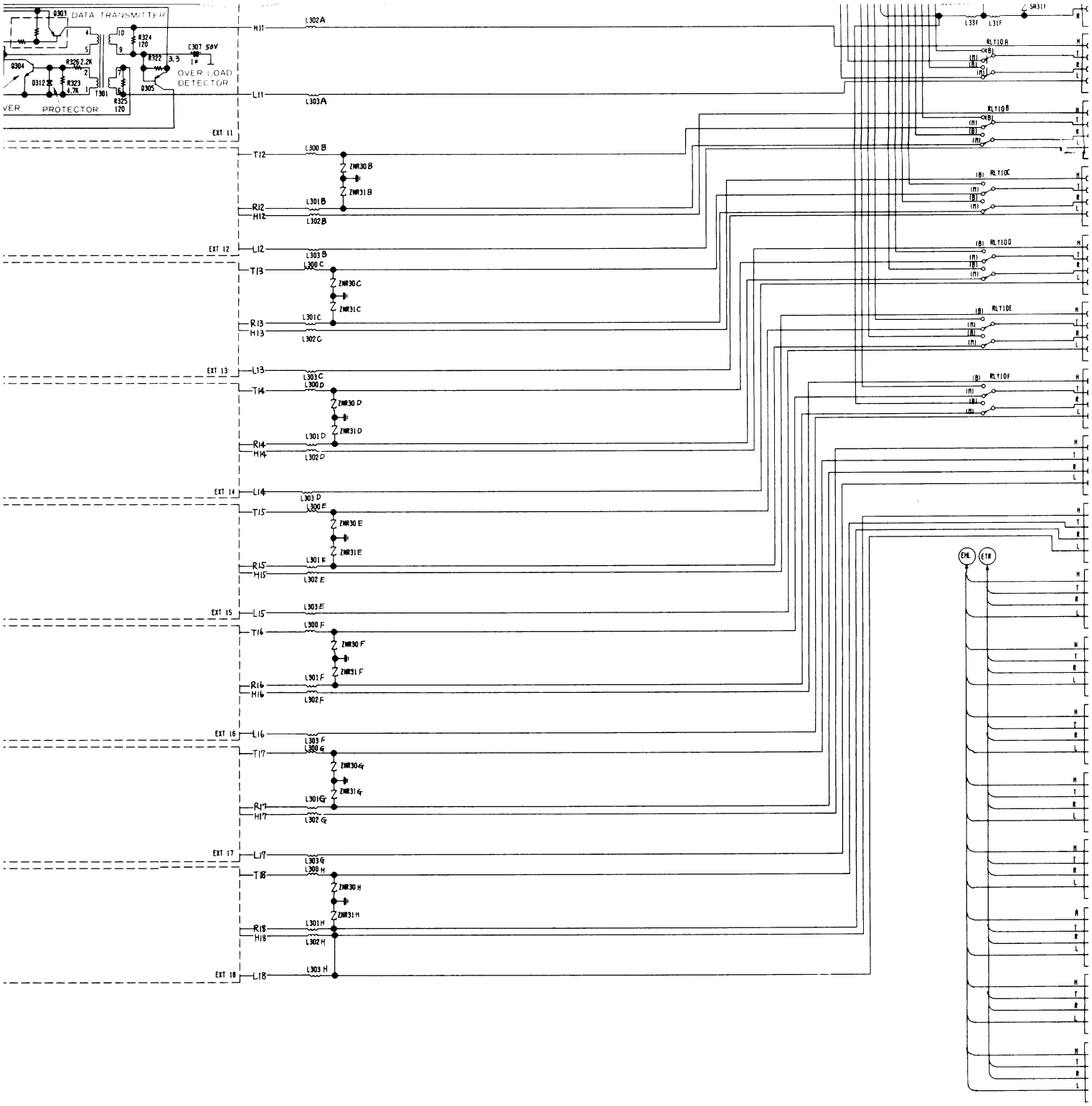
Q303
DATA TRANSMITTER
R324 120
C307 50V
R322 3.3
OVER LOAD DETECTOR
Q304
R326 2.2K
D312
R323 4.7K
T301
R325 120
Q305
PROTECTOR
H11
L11
L302A
L303A
EXT 11
T12
R12
H12
L300B
L301B
L302B
L303B
ZNR30B
ZNR31B
EXT 12
L12
T13
R13
H13
L300C
L301C
L302C
L303C
ZNR30C
ZNR31C
EXT 13
L13
T14
R14
H14
L300D
L301D
L302D
L303D
ZNR30D
ZNR31D
EXT 14
L14
T15
R15
H15
L300E
L301E
L302E
L303E
ZNR30E
ZNR31E
EXT 15
L15
T16
R16
H16
L300F
L301F
L302F
L303F
ZNR30F
ZNR31F
EXT 16
L16
T17
R17
H17
L300G
L301G
L302G
L303G
ZNR30G
ZNR31G
EXT 17
L17
T18
R18
H18
L300H
L301H
L302H
L303H
ZNR30H
ZNR31H
EXT 18
L18
SW311
L39F
L31F
RLY10A
RLY10B
RLY10C
RLY10D
RLY10E
RLY10F
EXL
ETR

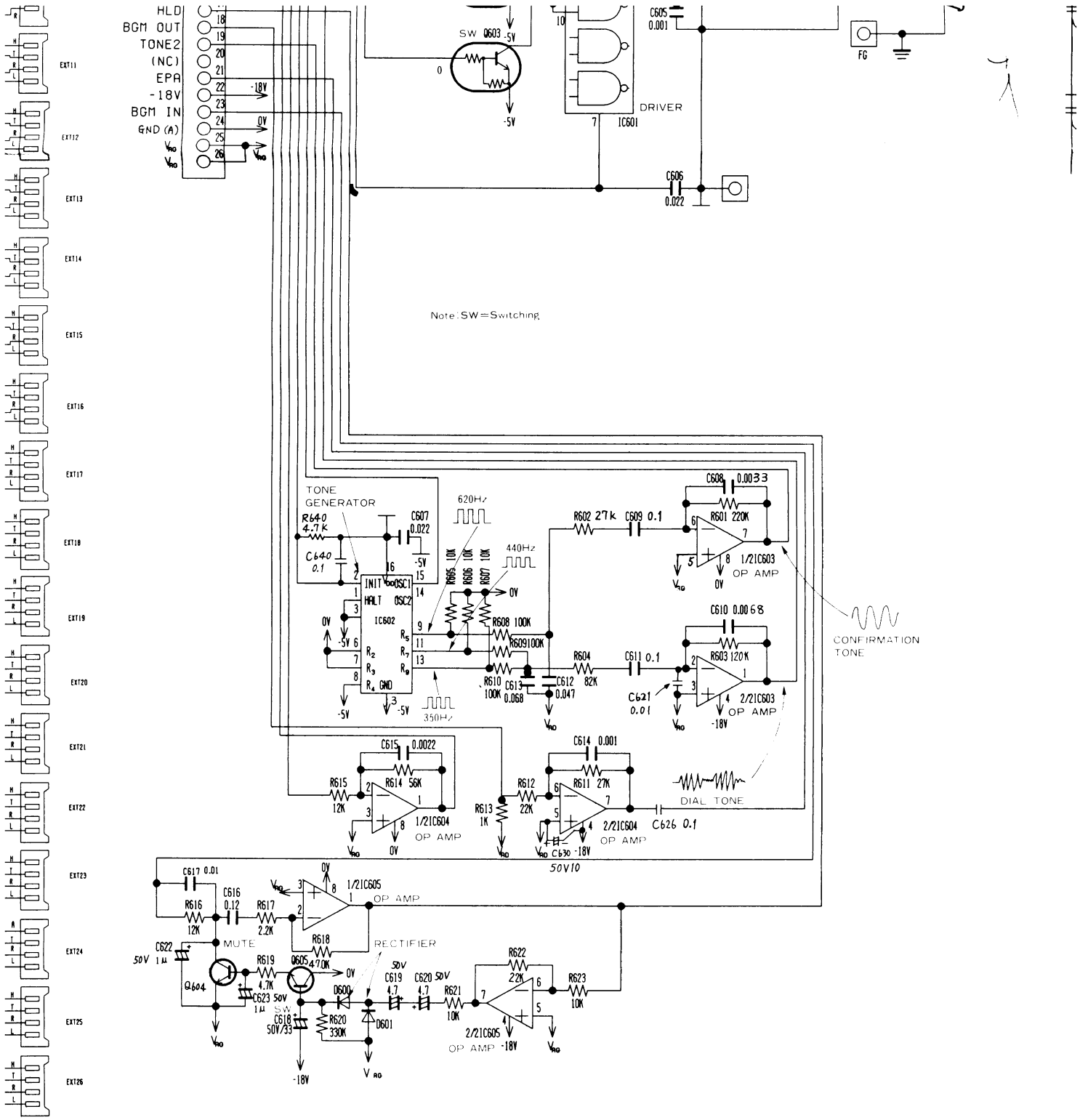
HLD
BGM OUT
TONE2
(NC)
EPA
-18V
BGM IN
GND (A)
SW Q603 -5V
DRIVER
IC601
C605 0.001
C606 0.022
FG
Note: SW=Switching
TONE GENERATOR
R640 4.7k
C640 0.1
C607 0.022
IC602
620Hz
440Hz
350Hz
R605 10K
R606 10K
R607 10K
R608 100K
R609 100K
R610 100K
C613 0.068
C612 0.047
R602 27k
C609 0.1
C608 0.0033
R601 220K
1/2IC603 OP AMP
R604 82K
C611 0.1
C610 0.0068
R603 120K
C621 0.01
2/2IC603 OP AMP
CONFIRMATION TONE
C615 0.0022
R615 12K
R614 56K
1/2IC604 OP AMP
C614 0.001
R612 22K
R611 27K
R613 1K
DIAL TONE
2/2IC604 OP AMP
C626 0.1
C630
50V10
C617 0.01
R616 12K
C616 0.12
R617 2.2K
1/2IC605 OP AMP
MUTE
RECTIFIER
C622 50V 1μ
Q604
R619 4.7K
Q605 47K
R618
C623 50V 1μ
SW
C618 50V/33
R620 330K
D600
D601
C619 4.7
C620 50V 4.7
R621 10K
R622 22K
R623 10K
2/2IC605 OP AMP
-18V
V RO

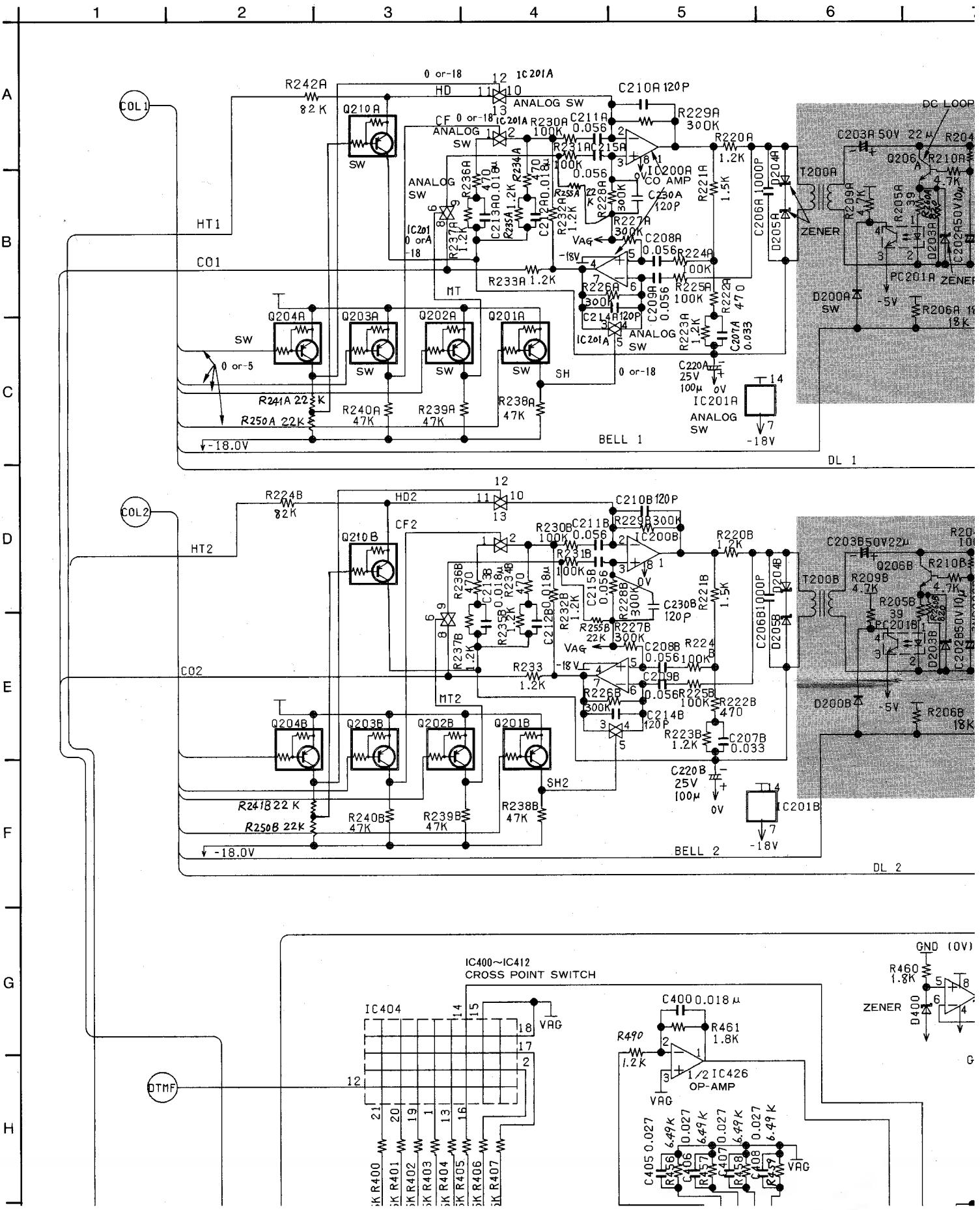

COL1
COL2
HT1
CO1
HT2
CO2
DTMF
BELL 1
BELL 2
DL 1
DL 2
IC201A
IC201B
IC200A
IC200B
IC404
IC400~IC412
CROSS POINT SWITCH
IC426
OP-AMP
ANALOG SW
CO AMP
DC LOOP
ZENER
GND (0V)
-18.0V

SCHEMATIC DIAGRAM

7 8 9 10 11 12

MAIN-B BOAD

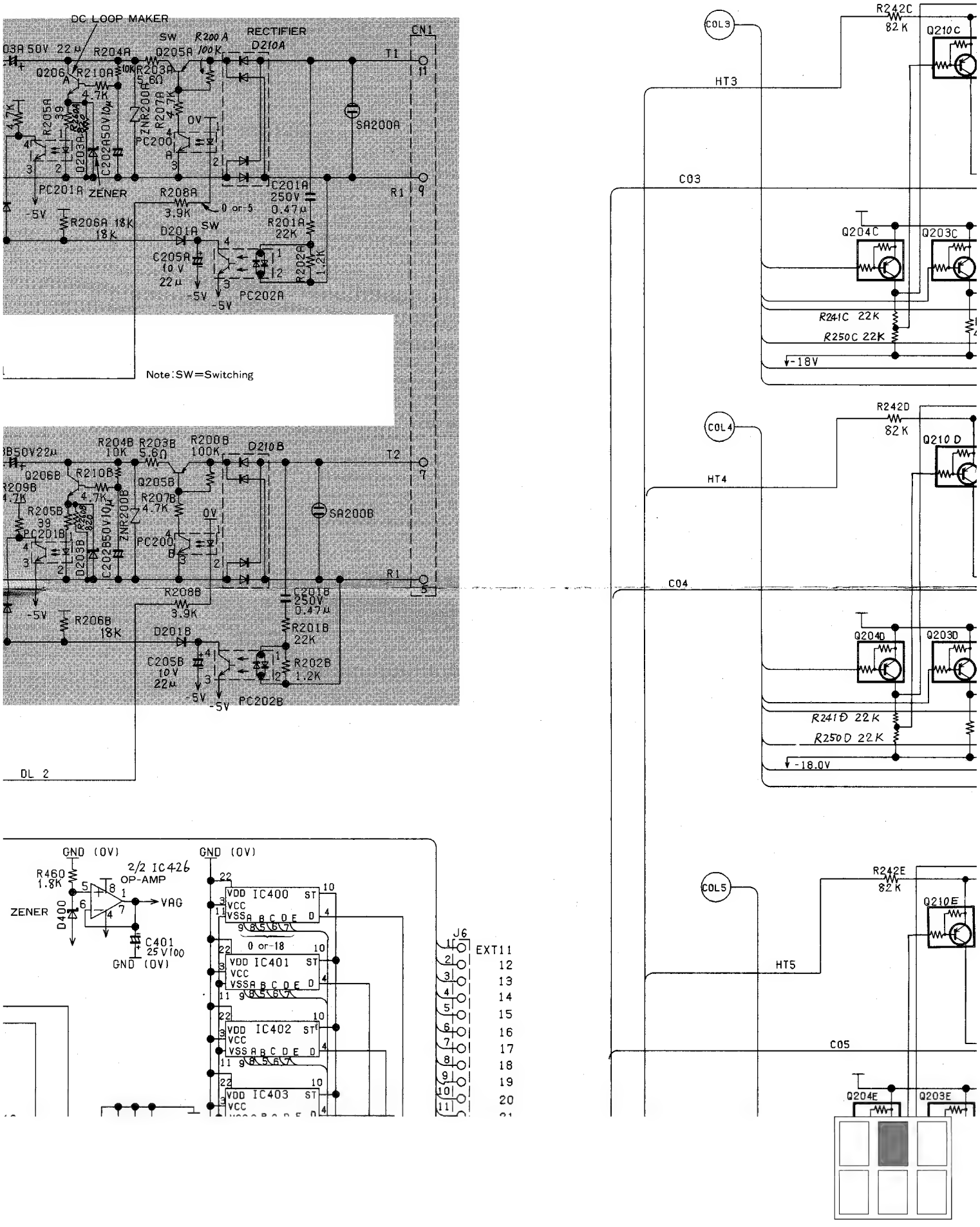

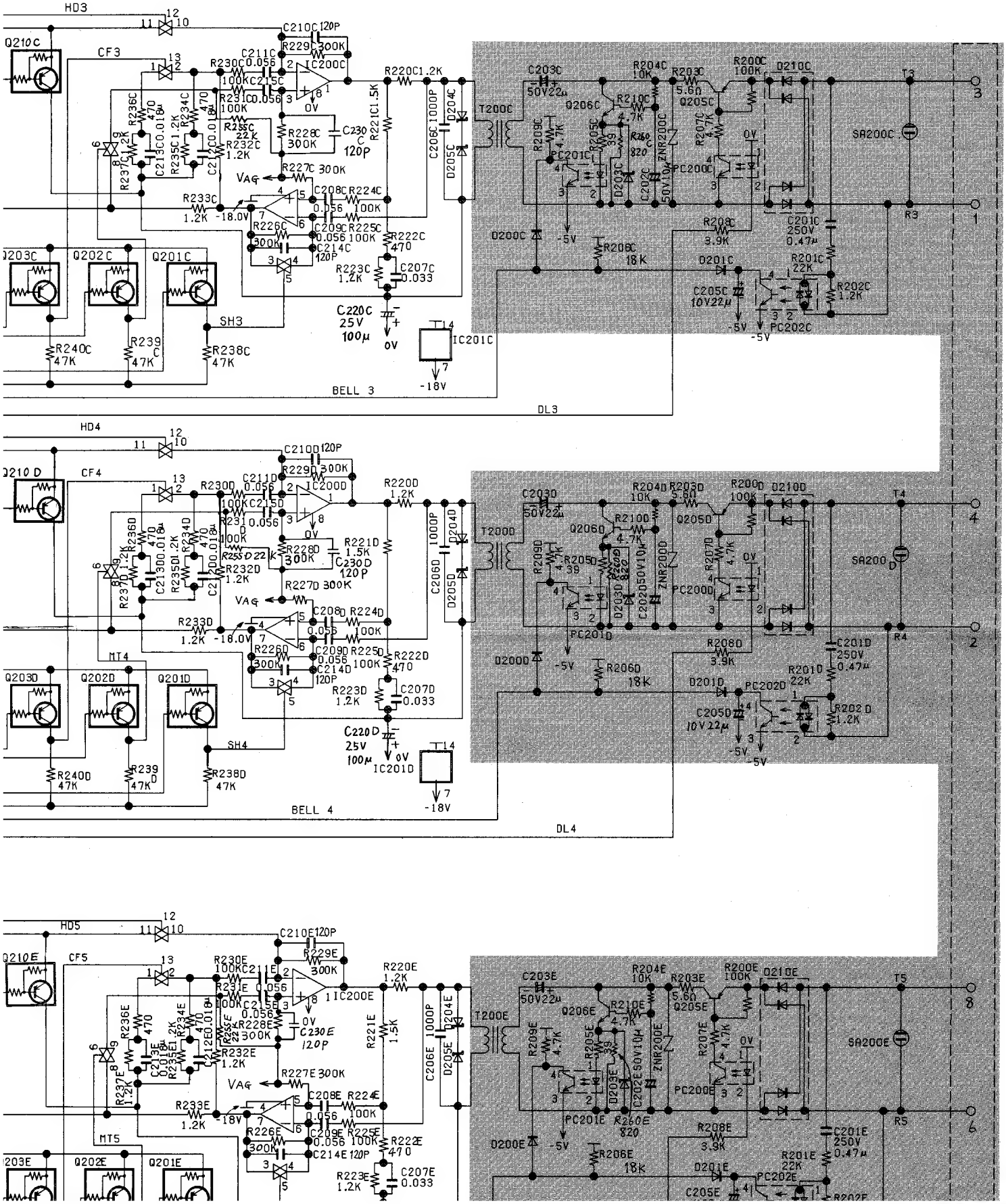
HD3
Q210C
CF3
C210C 120P
R229C 300K
IC200C
R230C 100K
C211C 0.056
C215C
R231C 100K
R228C 300K
C230C 120P
R227C 300K
VAG
R233C 1.2K
-18.0V
C208C 0.056
R224C 100K
R226C 300K
C209C 0.056
R225C 100K
C214C 120P
R222C 470
R223C 1.2K
C207C 0.033
R220C 1.2K
R221C 1.5K
C206C 1000P
D204C
D205C
C220C 25V 100μ
0V
T14
IC201C
7
-18V
SH3
R240C 47K
R239C 47K
R238C 47K
Q203C
Q202C
Q201C
BELL 3
DL3
T200C
C203C 50V22μ
R204C 10K
R203C 5.60
Q205C
R200C 100K
D210C
T3
3
Q206C
R210C 4.7K
R209C 4.7K
R205C 39
R260C 820
ZNR200C
R207C 4.7K
0V
SA200C
PC201C
D203C
C202C 50V10μ
PC200C
D200C
-5V
R208C 3.9K
R206C 18K
C201C 250V 0.47μ
D201C
R201C 22K
R202C 1.2K
C205C 10V22μ
PC202C
R3
1
HD4
Q210D
CF4
C210D 120P
R229D 300K
IC200D
R230D 100K
C211D 0.056
C215D
R231D 100K
R228D 300K
C230D 120P
R227D 300K
VAG
R233D 1.2K
-18.0V
C208D 0.056
R224D 100K
R226D 300K
C209D 0.056
R225D 100K
C214D 120P
R222D 470
R223D 1.2K
C207D 0.033
R220D 1.2K
R221D 1.5K
C206D 1000P
D204D
D205D
C220D 25V 100μ
0V
T14
IC201D
7
-18V
SH4
R240D 47K
R239D 47K
R238D 47K
Q203D
Q202D
Q201D
MT4
BELL 4
DL4
T200D
C203D 50V22μ
R204D 10K
R203D 5.60
Q205D
R200D 100K
D210D
T4
4
Q206D
R210D 4.7K
R209D 4.7K
R205D 39
R260D 820
ZNR200D
R207D 4.7K
0V
SA200D
PC201D
D203D
C202D 50V10μ
PC200D
D200D
-5V
R208D 3.9K
R206D 18K
C201D 250V 0.47μ
D201D
PC202D
R201D 22K
R202D 1.2K
C205D 10V22μ
R4
2
HD5
Q210E
CF5
C210E 120P
R229E 300K
IC200E
R230E 100K
C211E
C215E
R231E 100K
R228E 300K
C230E 120P
R227E 300K
VAG
R233E 1.2K
-18V
C208E 0.056
R224E 100K
R226E 300K
C209E 0.056
R225E 100K
C214E 120P
R222E 470
R223E 1.2K
C207E 0.033
R220E 1.2K
R221E 1.5K
C206E 1000P
D204E
D205E
Q203E
Q202E
Q201E
MT5
T200E
C203E 50V22μ
R204E 10K
R203E 5.60
Q205E
R200E 100K
D210E
T5
8
Q206E
R210E 4.7K
R209E 4.7K
R205E 39
R260E 820
ZNR200E
R207E 4.7K
0V
SA200E
PC201E
D203E
C202E 50V10μ
PC200E
D200E
-5V
R208E 3.9K
R206E 18K
C201E 250V 0.47μ
D201E
PC202E
R201E 22K
R202E
C205E
R5
6

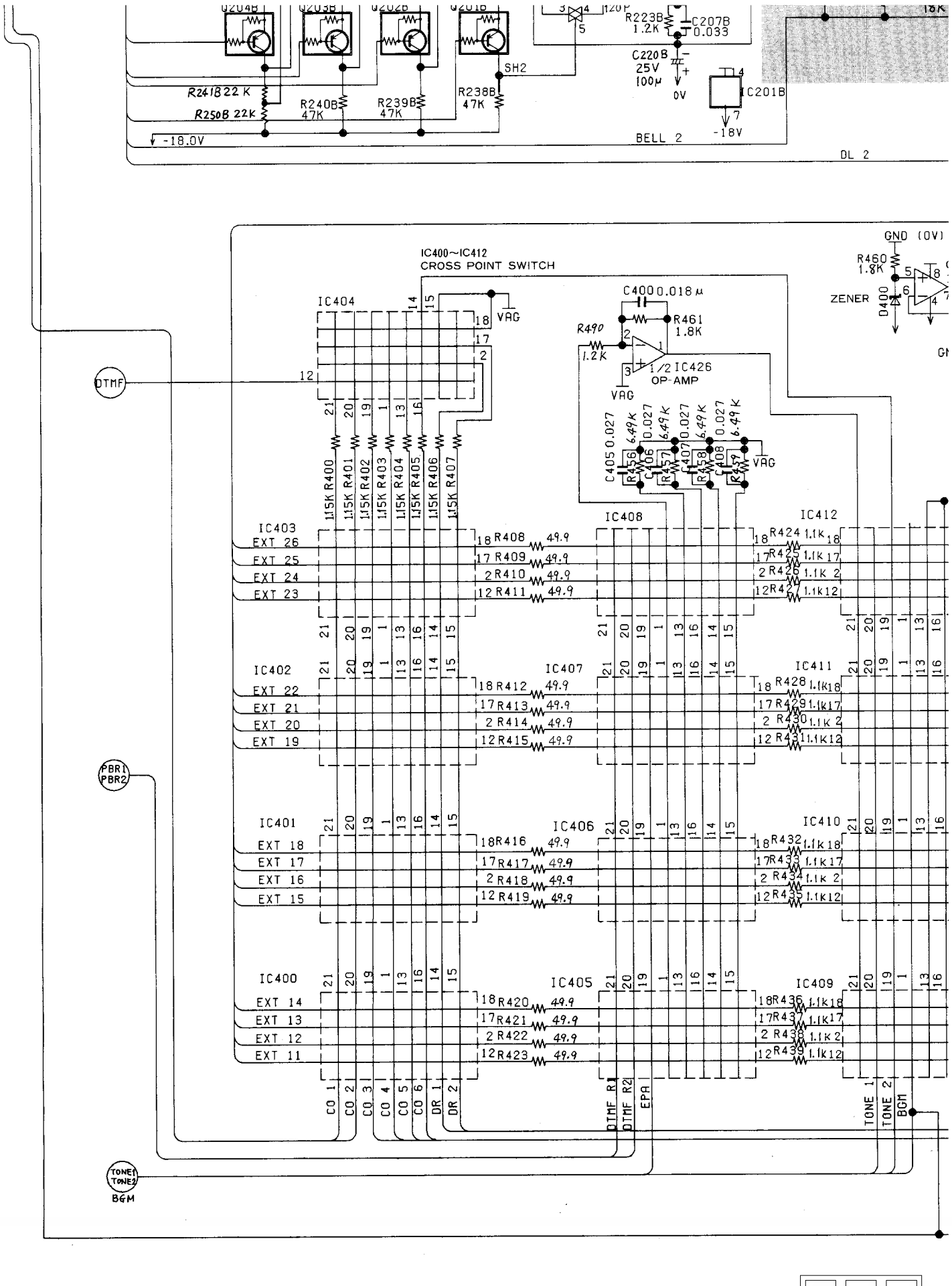
Q204B
Q203B
Q202B
Q201B
R241B 22 K
R250B 22K
R240B 47K
R239B 47K
R238B 47K
SH2
-18.0V
R223B 1.2K
C207B 0.033
C220B 25V 100μ
0V
IC201B
-18V
BELL 2
DL 2
IC400~IC412
CROSS POINT SWITCH
GND (0V)
R460 1.8K
ZENER
D400
C400 0.018μ
R461 1.8K
R490 1.2K
1/2 IC426 OP-AMP
VAG
DTMF
PBR1
PBR2
TONE1
TONE2
BGM
IC404
IC403
IC402
IC401
IC400
IC408
IC407
IC406
IC405
IC412
IC411
IC410
IC409
EXT 26
EXT 25
EXT 24
EXT 23
EXT 22
EXT 21
EXT 20
EXT 19
EXT 18
EXT 17
EXT 16
EXT 15
EXT 14
EXT 13
EXT 12
EXT 11
R400 1.5K
R401 1.5K
R402 1.5K
R403 1.5K
R404 1.5K
R405 1.5K
R406 1.5K
R407 1.5K
C405 0.027
C406 0.027
C407 0.027
C408 0.027
C409 0.027
6.49K
R408 49.9
R409 49.9
R410 49.9
R411 49.9
R412 49.9
R413 49.9
R414 49.9
R415 49.9
R416 49.9
R417 49.9
R418 49.9
R419 49.9
R420 49.9
R421 49.9
R422 49.9
R423 49.9
R424 1.1K
R425 1.1K
R426 1.1K
R427 1.1K
R428 1.1K
R429 1.1K
R430 1.1K
R431 1.1K
R432 1.1K
R433 1.1K
R434 1.1K
R435 1.1K
R436 1.1K
R437 1.1K
R438 1.1K
R439 1.1K
CO 1
CO 2
CO 3
CO 4
CO 5
CO 6
DR 1
DR 2
DTMF R1
DTMF R2
EPA
TONE 1
TONE 2
BGM

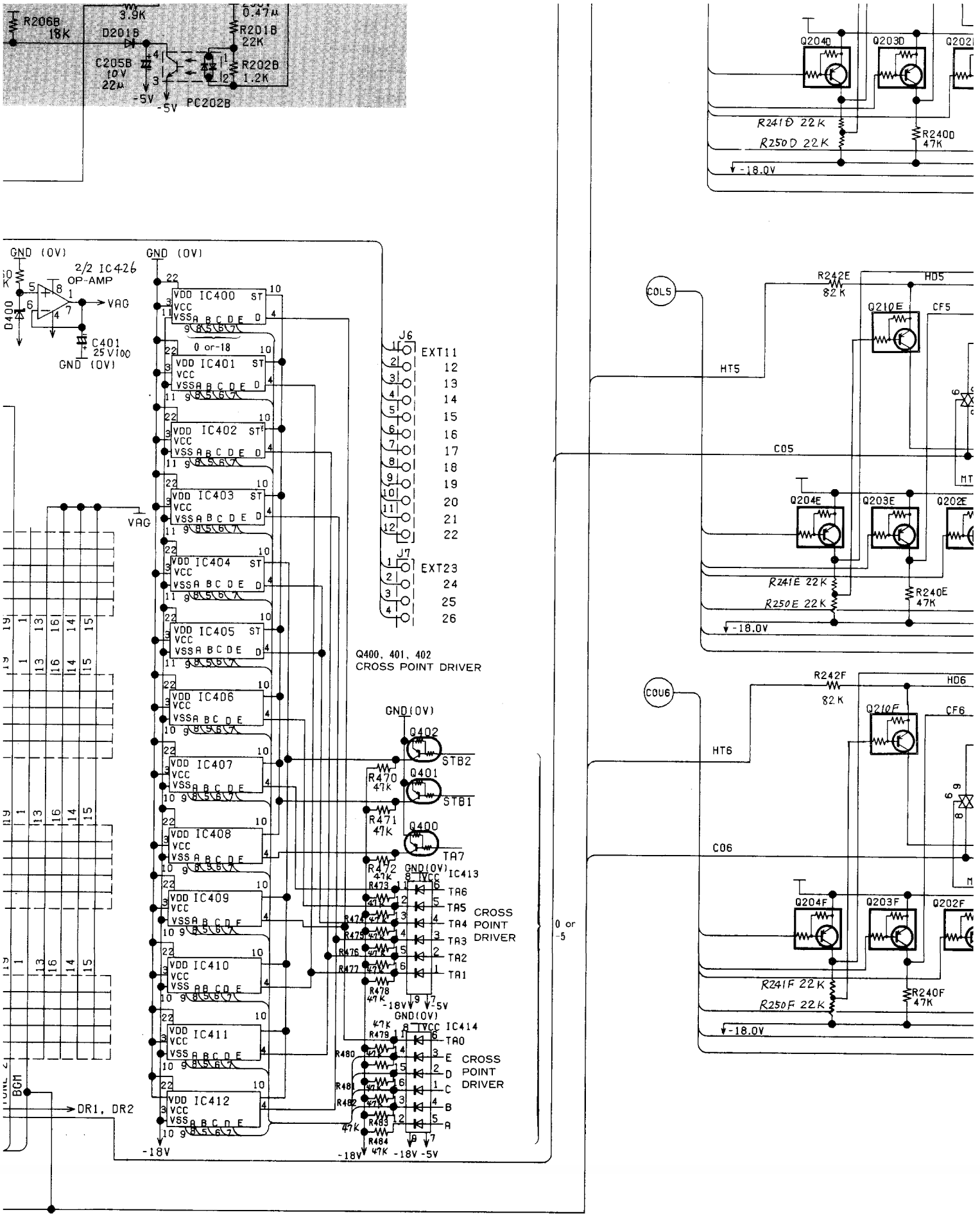

R206B 18K
3.9K
D201B
C205B 10V 22μ
0.47μ
R201B 22K
R202B 1.2K
-5V
PC202B
GND (0V)
2/2 IC426 OP-AMP
VAG
D400
C401 25V100
IC400
IC401
IC402
IC403
IC404
IC405
IC406
IC407
IC408
IC409
IC410
IC411
IC412
0 or -18
J6
EXT11
J7
EXT23
Q400, 401, 402 CROSS POINT DRIVER
Q402
STB2
Q401
STB1
Q400
TA7
R470 47K
R471 47K
R472 47K
IC413
TA6
TA5
TA4
TA3
TA2
TA1
CROSS POINT DRIVER
IC414
TA0
E
D
C
B
A
0 or -5
-18V
-5V
BGM
DR1, DR2
Q204D
Q203D
R241D 22K
R250D 22K
R240D 47K
-18.0V
COL5
R242E 82K
HD5
Q210E
CF5
HT5
C05
Q204E
Q203E
Q202E
R241E 22K
R250E 22K
R240E 47K
COU6
R242F 82K
HD6
Q210F
CF6
HT6
C06
Q204F
Q203F
Q202F
R241F 22K
R250F 22K
R240F 47K

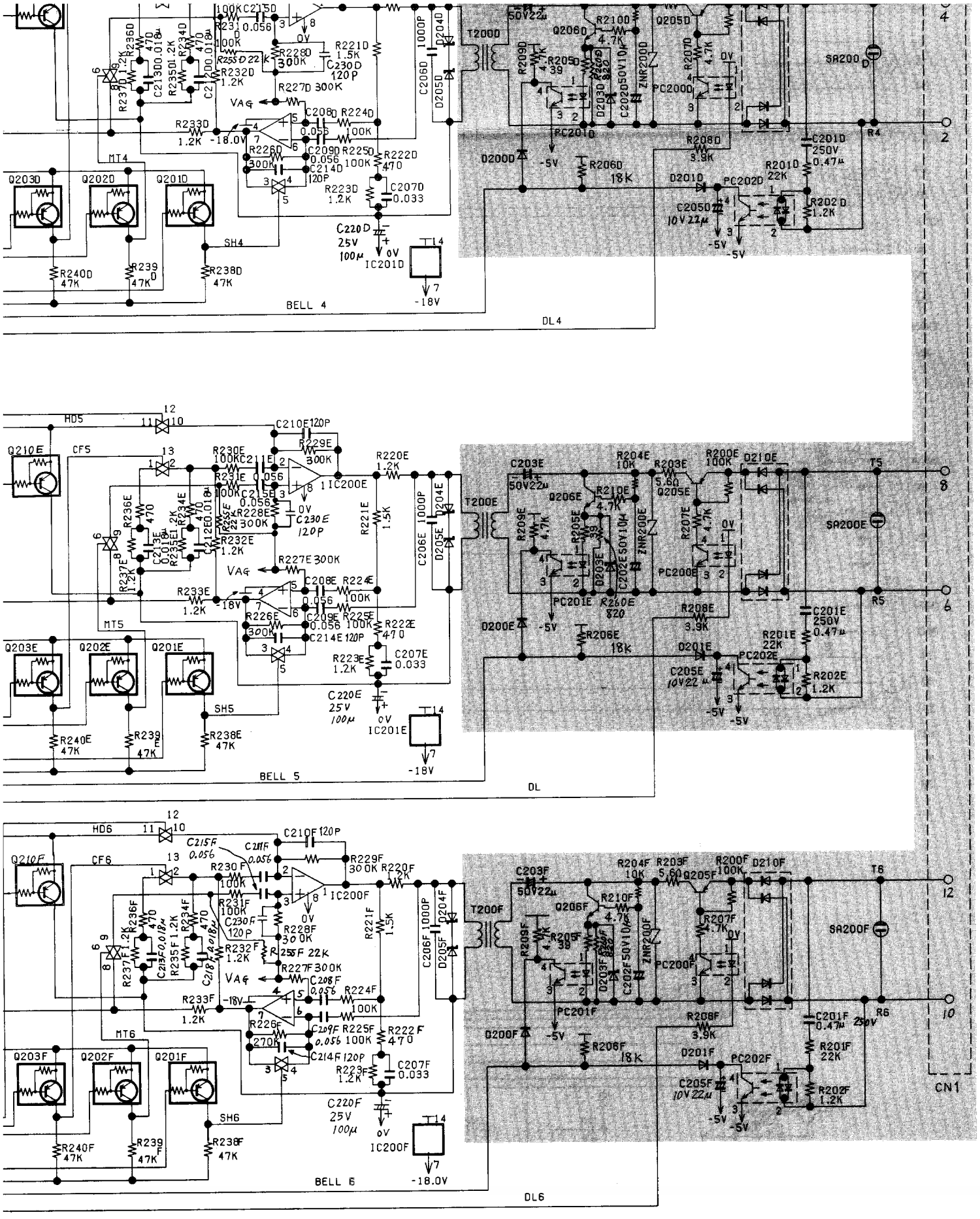
BELL 4
DL4
BELL 5
DL
BELL 6
DL6
CN1
IC201D
IC201E
IC200F
T200D
T200E
T200F
SA200D
SA200E
SA200F
PC200D
PC200E
PC200F
PC201D
PC201E
PC201F
PC202D
PC202E
PC202F
Q200D
Q200E
Q200F
Q201D
Q201E
Q201F
Q202D
Q202E
Q202F
Q203D
Q203E
Q203F
Q205D
Q205E
Q205F
Q206D
Q206E
Q206F
Q210E
Q210F
HD5
HD6
CF5
CF6
MT4
MT5
MT6
SH4
SH5
SH6
VAG
-18.0V
-18V
-5V
0V
R4
R5
R6

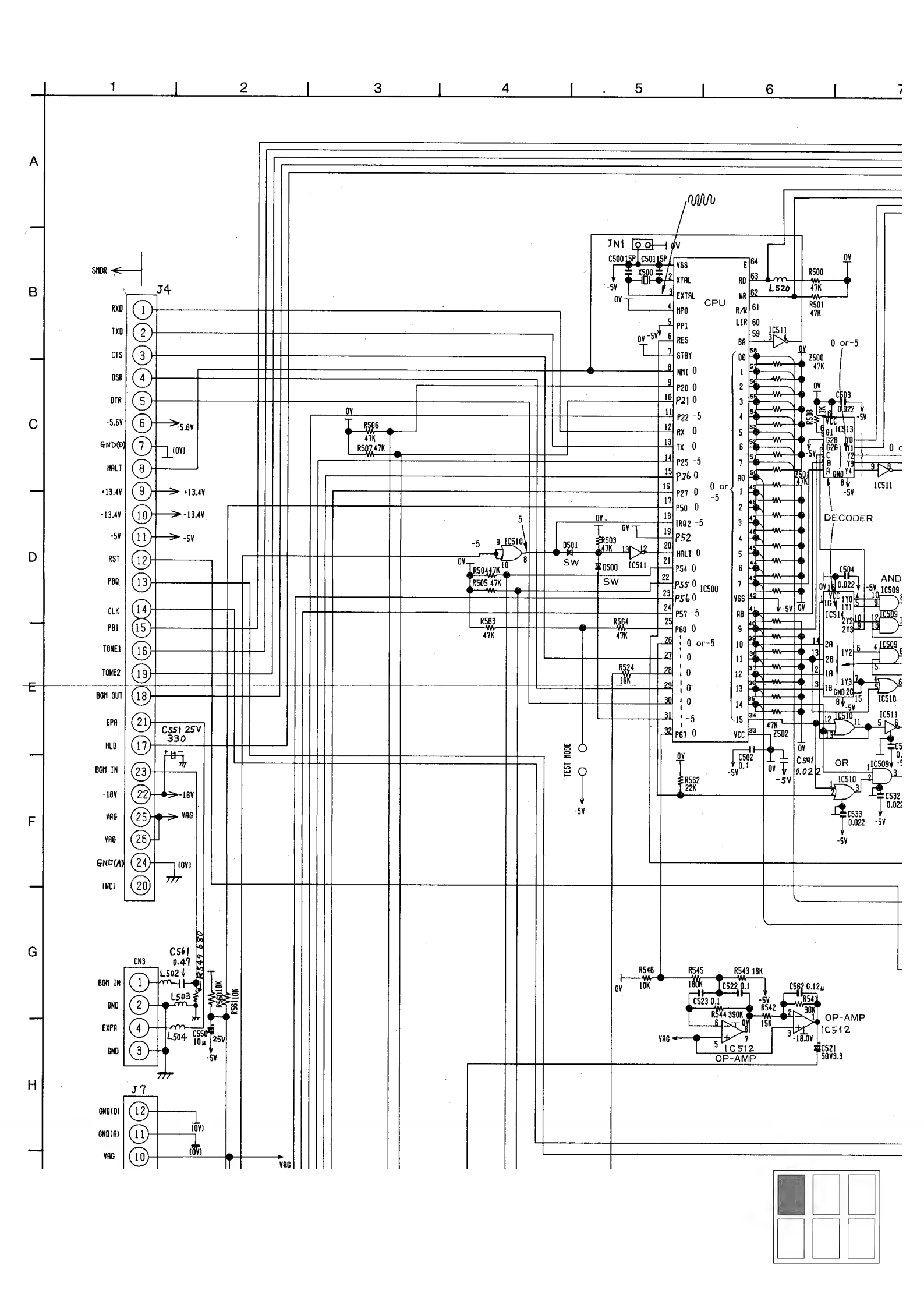
1
2
3
4
5
6
A
B
C
D
E
F
G
H
SMDR
J4
RXD
TXD
CTS
DSR
DTR
-5.6V
GND(D)
HALT
+13.4V
-13.4V
-5V
RST
PBQ
CLK
PBI
TONE1
TONE2
BGM OUT
EPA
HLD
BGM IN
-18V
VAG
VAG
GND(A)
(NC)
C551 25V 330
J7
GND(D)
GND(A)
VAG
CN3
BGM IN
GND
EXPA
GND
L502
L503
L504
R549 680
R560 10K
R561 10K
C550 10μ 25V
JN1
X500
C500 15P
C501 15P
CPU
VSS
XTAL
EXTAL
MP0
PP1
RES
STBY
NMI
P20
P21
P22
RX
TX
P25
P26
P27
P50
IRQ2
P52
HALT
P54
P55
P56
P57
P60
P67
IC500
L520
R500 47K
R501 47K
R506 47K
R507 47K
R503 47K
R504 47K
R505 47K
R563 47K
R564 47K
R524 10K
D501
D500
SW
IC510
IC511
TEST MODE
R562 22K
Z500 47K
Z501 47K
Z502 47K
R508 47K
C502 0.1
C503 0.022
C504 0.022
C591 0.022
C532 0.022
C533 0.022
DECODER
IC513
IC514
AND
OR
R546 10K
R545 180K
R543 18K
C522 0.1
C523 0.1
R544 390K
R542 15K
C562 0.12μ
R541 30K
OP-AMP
IC512
C521 50V3.3

SCHEMATIC DIAGRAM

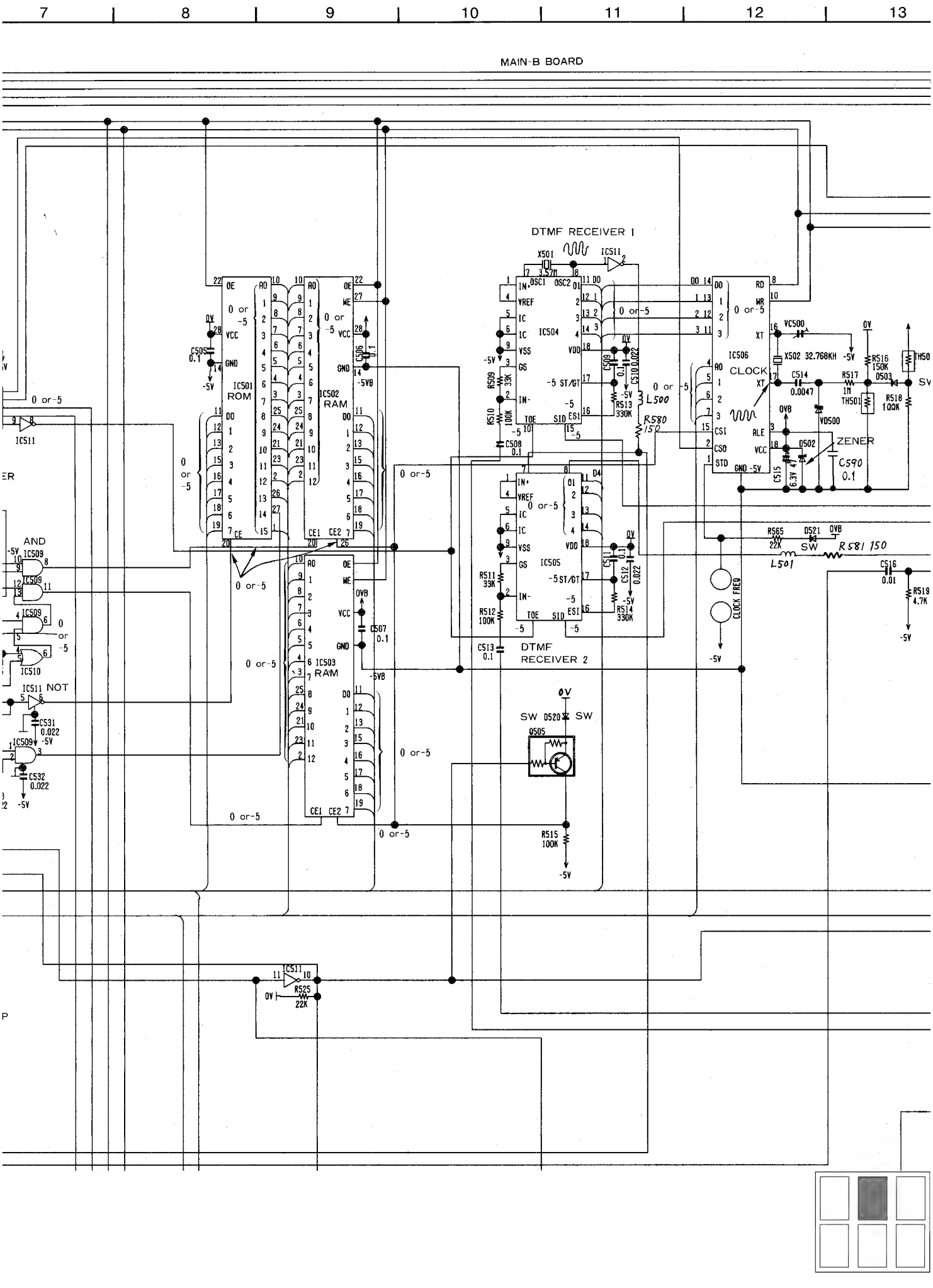

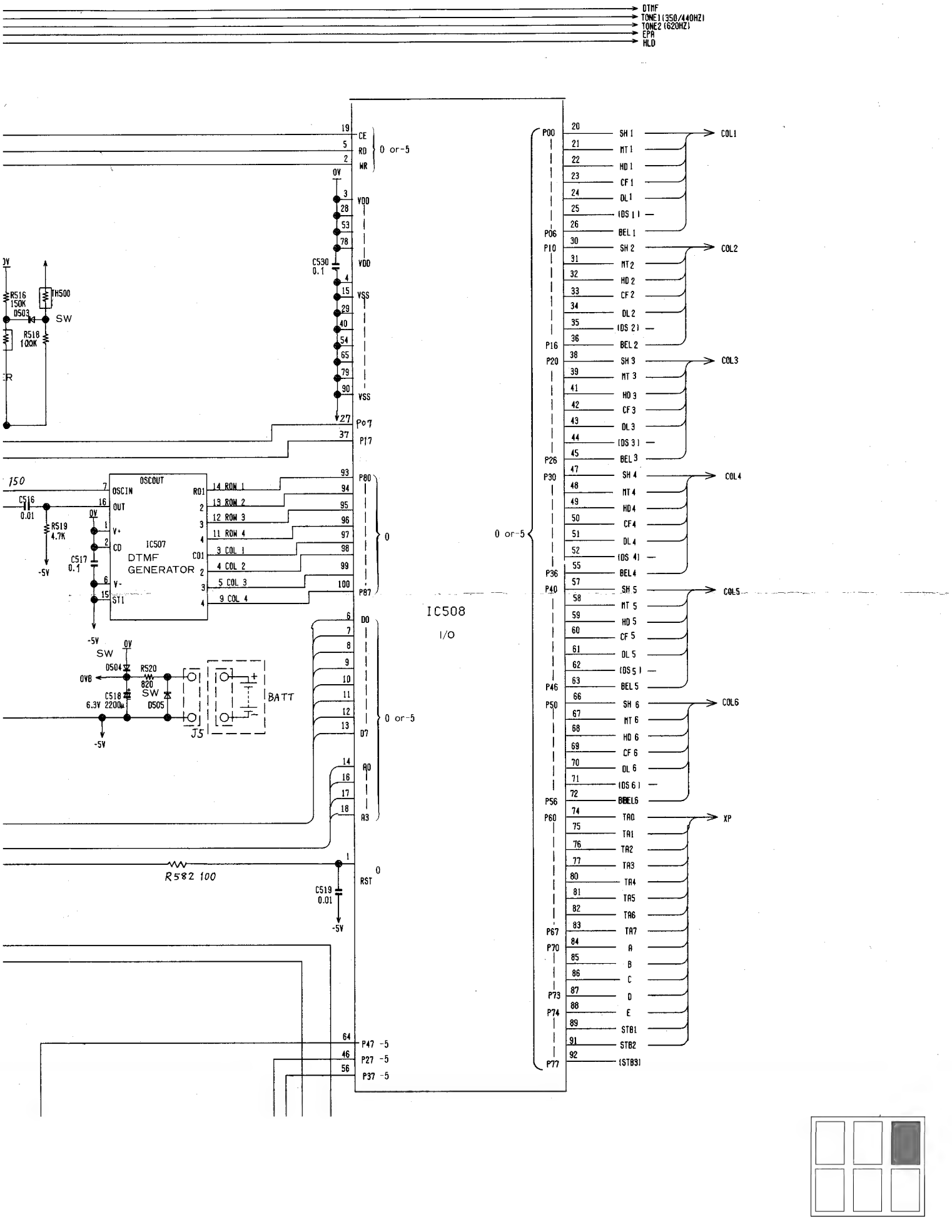
DTMF
TONE1(350/440HZ)
TONE2(620HZ)
EPR
HLD
IC508
I/O
IC507
DTMF GENERATOR
OSCIN
OSCOUT
OUT
V+
CD
V-
ST1
R01
C01
14 ROW 1
13 ROW 2
12 ROW 3
11 ROW 4
3 COL 1
4 COL 2
5 COL 3
9 COL 4
CE
RD
WR
VDD
VSS
P07
P17
P80
P87
D0
D7
A0
A3
RST
P47 -5
P27 -5
P37 -5
0 or-5
C516 0.01
R519 4.7K
C517 0.1
C530 0.1
C519 0.01
R582 100
R516 150K
R518 100K
D503
TH500
SW
D504
D505
R520 820
C518 6.3V 2200u
BATT
J5
P00
P06
P10
P16
P20
P26
P30
P36
P40
P46
P50
P56
P60
P67
P70
P73
P74
P77
SH 1
MT 1
HD 1
CF 1
DL 1
(DS 1)
BEL 1
SH 2
MT 2
HD 2
CF 2
DL 2
(DS 2)
BEL 2
SH 3
MT 3
HD 3
CF 3
DL 3
(DS 3)
BEL 3
SH 4
MT 4
HD 4
CF 4
DL 4
(DS 4)
BEL 4
SH 5
MT 5
HD 5
CF 5
DL 5
(DS 5)
BEL 5
SH 6
MT 6
HD 6
CF 6
DL 6
(DS 6)
BEL 6
TA0
TA1
TA2
TA3
TA4
TA5
TA6
TA7
A
B
C
D
E
STB1
STB2
(STB3)
COL1
COL2
COL3
COL4
COL5
COL6
XP

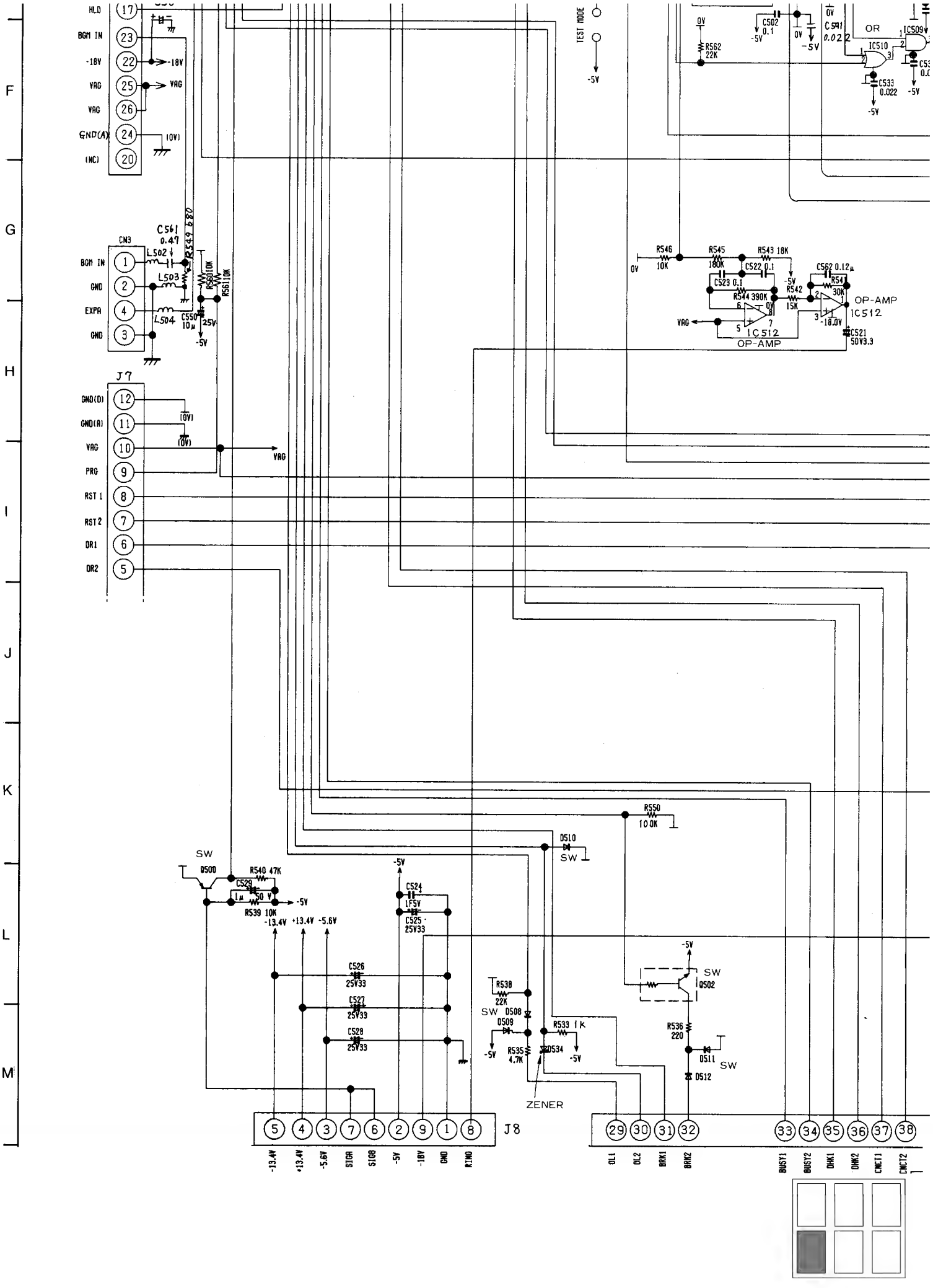
HLD
BGM IN
-18V
VAG
VAG
GND(A)
(NC)
CN3
BGM IN
GND
EXPA
GND
L502
L503
L504
C561 0.47
C550 10μ
R560 10K
R561 10K
J7
GND(D)
GND(A)
VAG
PRG
RST1
RST2
DR1
DR2
TEST MODE
R562 22K
C502 0.1
C591 0.022
IC509
IC510
C533 0.022
R546 10K
R545 180K
R543 18K
C522 0.1
C523 0.1
C562 0.12μ
R544 390K
R542 15K
OP-AMP
IC512
C521 50V3.3
R550 100K
D510
SW
Q500
R540 47K
C529 1μ 50V
R539 10K
-13.4V +13.4V -5.6V
C524 1F5V
C525 25V33
C526 25V33
C527 25V33
C528 25V33
R538 22K
D508
D509
R535 4.7K
R533 1K
D534
ZENER
Q502
R536 220
D511
D512
J8
-13.4V
+13.4V
-5.6V
SIGA
SIGB
-5V
-18V
GND
RING
OL1
OL2
BRK1
BRK2
BUSY1
BUSY2
DWK1
DWK2
CMCT1
CMCT2

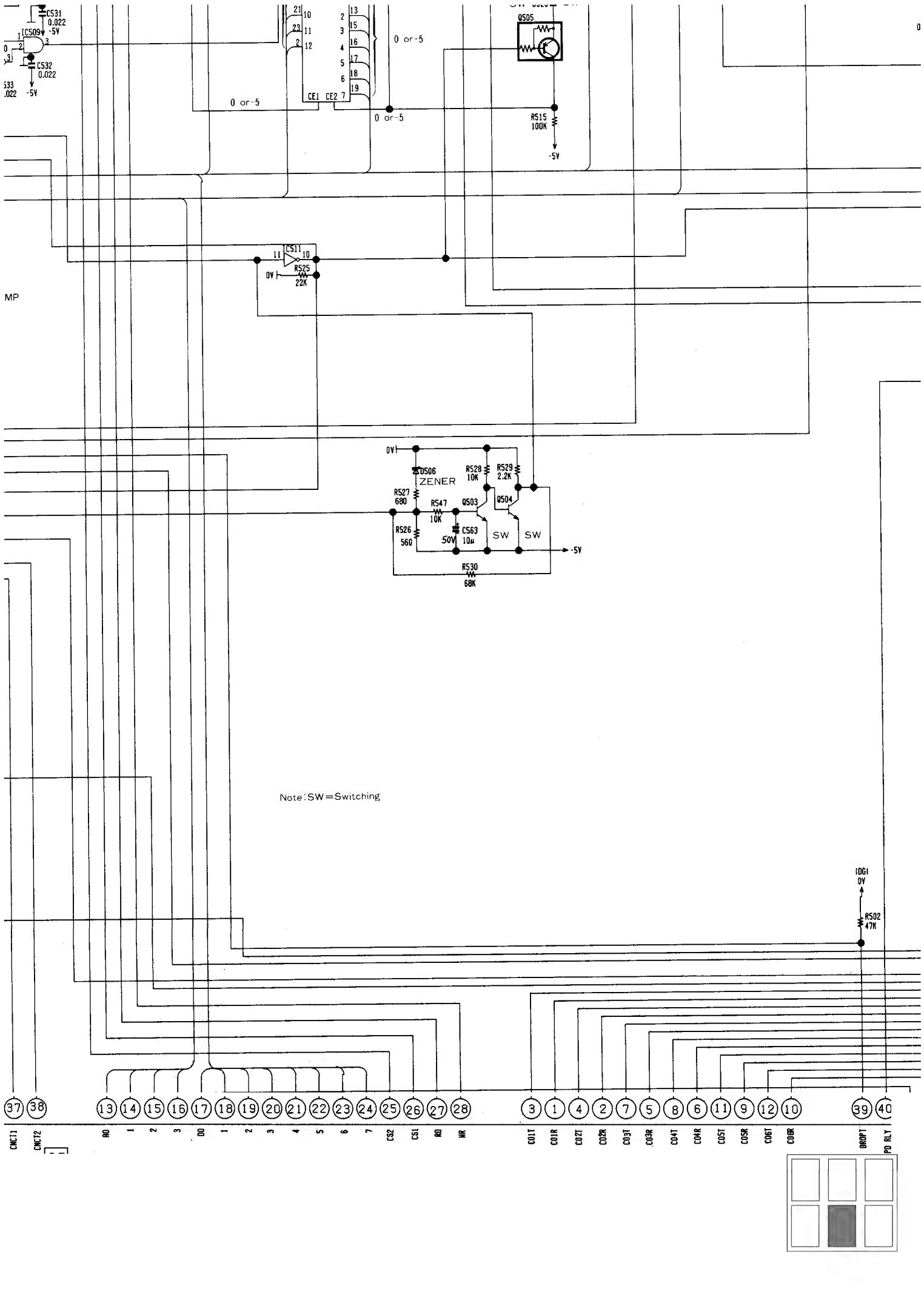
C531 0.022 -5V
C509
C532 0.022
-5V
0 or-5
CE1 CE2
Q505
R515 100K
-5V
C511
R525 22K
0V
MP
0V
DS06 ZENER
R528 10K
R529 2.2K
R527 680
R547 10K
Q503
Q504
R526 560
C563 50V 10μ
SW
SW
-5V
R530 68K
Note: SW=Switching
IDG1 0V
R502 47K
CNCT1
CNCT2
A0
A1
A2
A3
D0
D1
D2
D3
D4
D5
D6
D7
CS2
CS1
RD
WR
CO1T
CO1R
CO2T
CO2R
CO3T
CO3R
CO4T
CO4R
CO5T
CO5R
CO6T
CO6R
BROPT
PD RLY

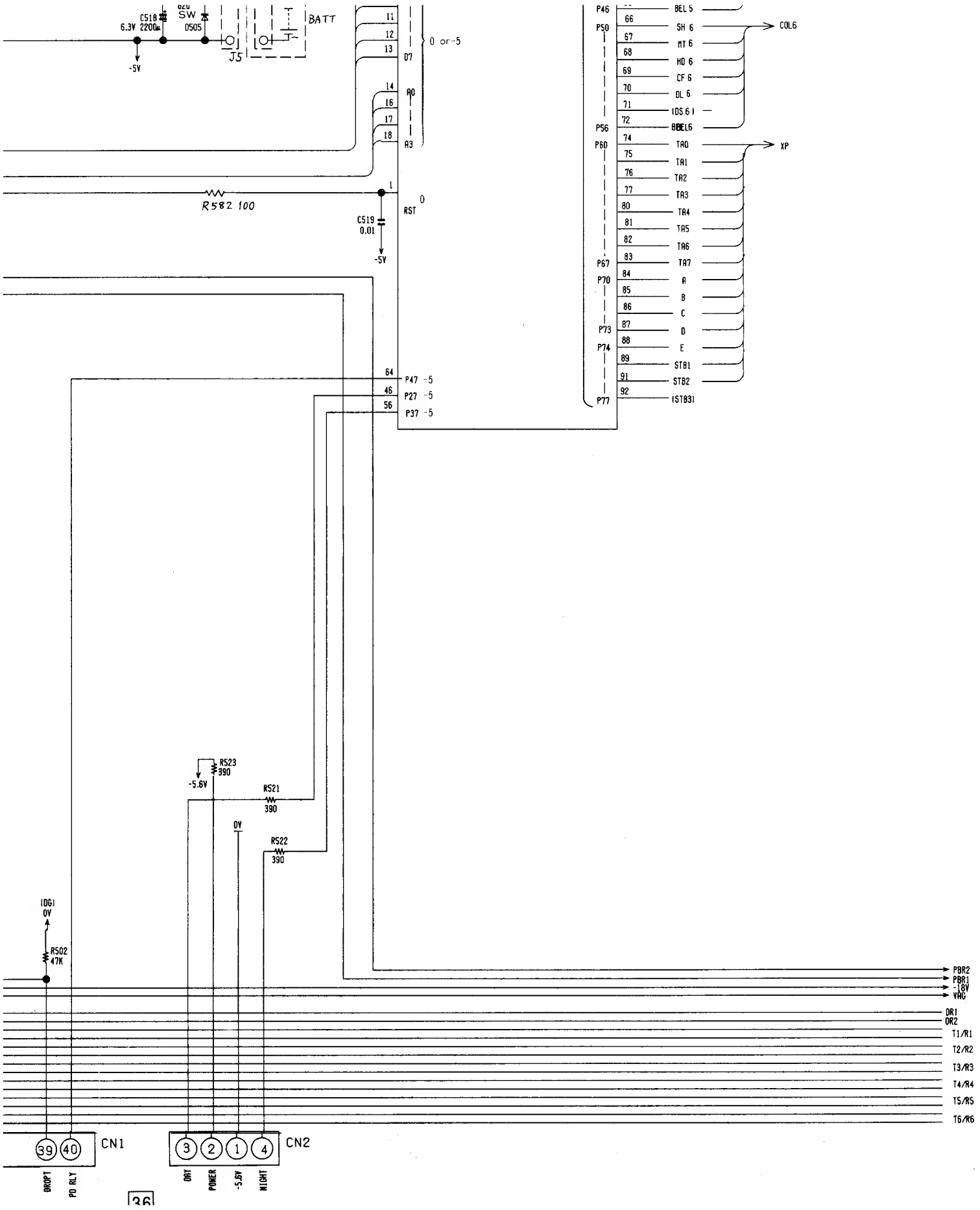
C518
6.3V 2200u
SW
D505
J5
BATT
-5V
11
12
13
D7
0 or -5
14
16
17
18
A0
A3
R582 100
1
RST
0
C519
0.01
-5V
64
P47 -5
46
P27 -5
56
P37 -5
P46
P50
P56
P60
P67
P70
P73
P74
P77
BEL 5
66
SH 6
67
MT 6
68
HD 6
69
CF 6
70
DL 6
71
(DS 6)
72
BEL6
74
TA0
75
TA1
76
TA2
77
TA3
80
TA4
81
TA5
82
TA6
83
TA7
84
A
85
B
86
C
87
D
88
E
89
STB1
91
STB2
92
(STB3)
COL6
XP
R523
390
-5.6V
R521
390
0V
R522
390
(DG)
0V
R502
47K
PBR2
PBR1
-18V
VAG
DR1
DR2
T1/R1
T2/R2
T3/R3
T4/R4
T5/R5
T6/R6
39
40
CN1
DROPT
PO RLY
3
2
1
4
CN2
DAY
POWER
-5.6V
NIGHT

WIRING CONNECTION DIAGRAM

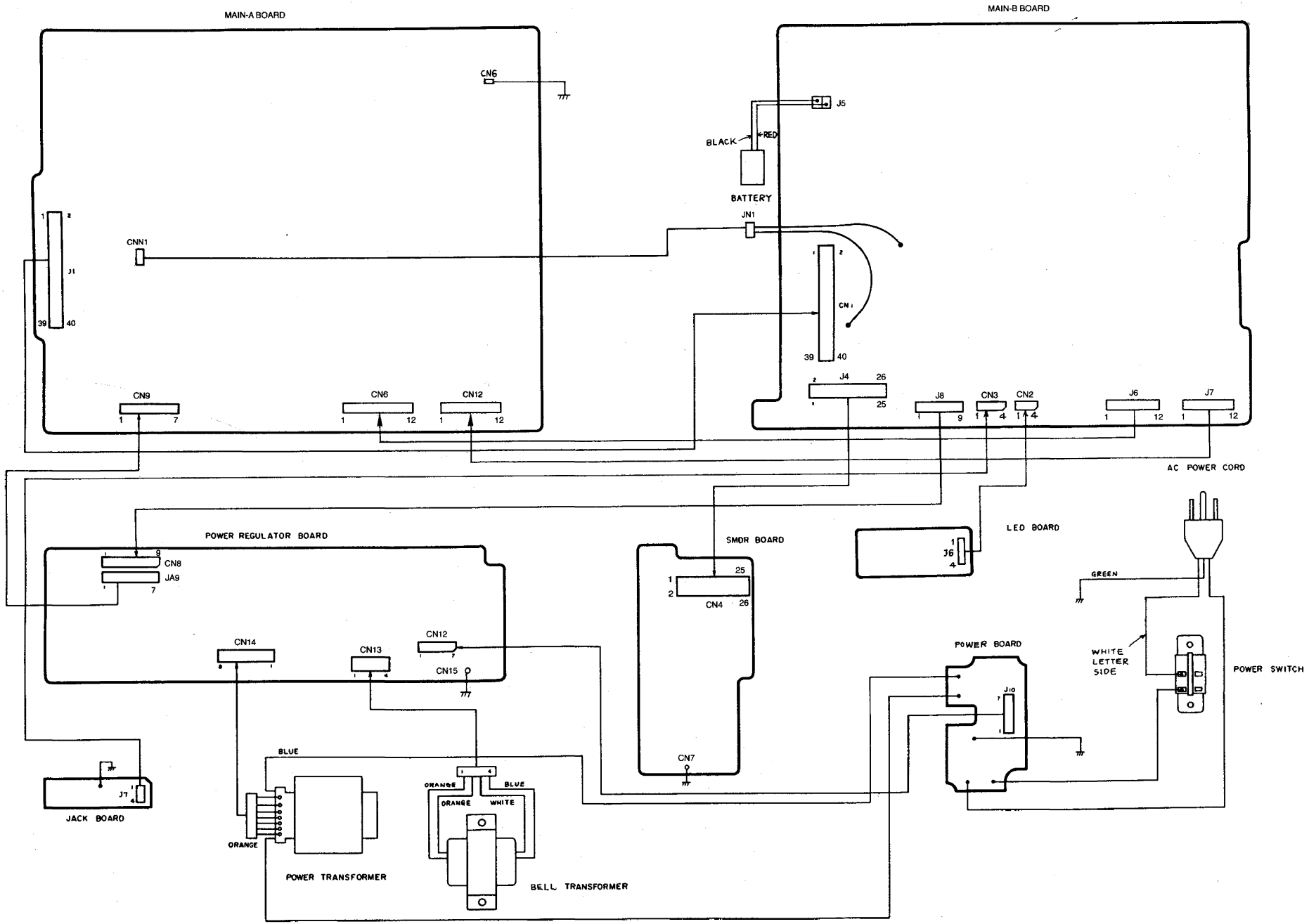

IC BLOCK DIAGRAM

IC400~412 PQVIM402101P

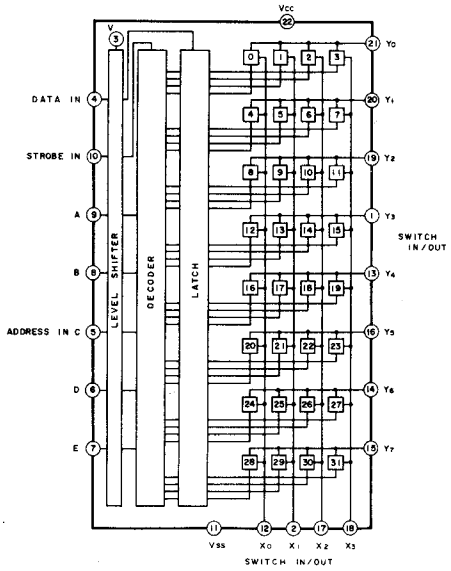

IC500 PQVIH63B03XP

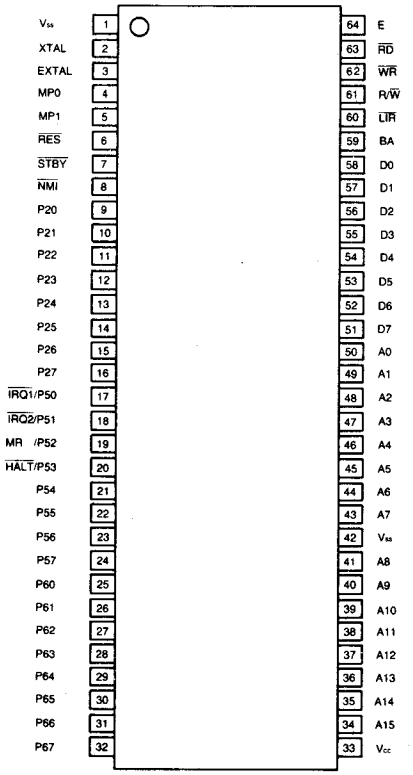

IC413, 414 PQVITD62706P

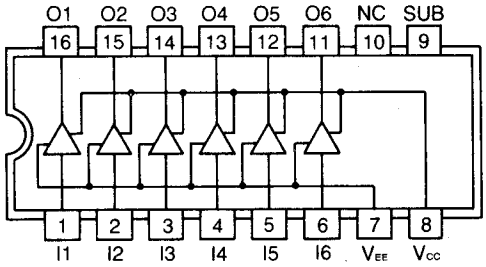

IC502, 503 PQVIHM6264LA

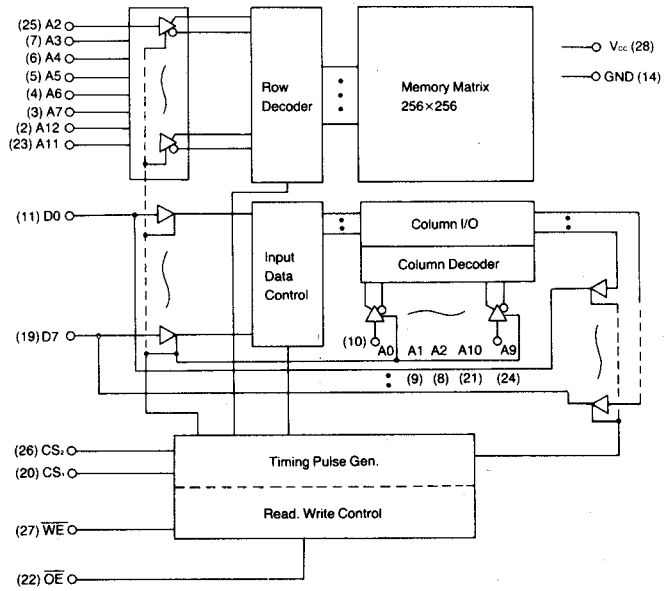

IC514 PQVITC7H139P

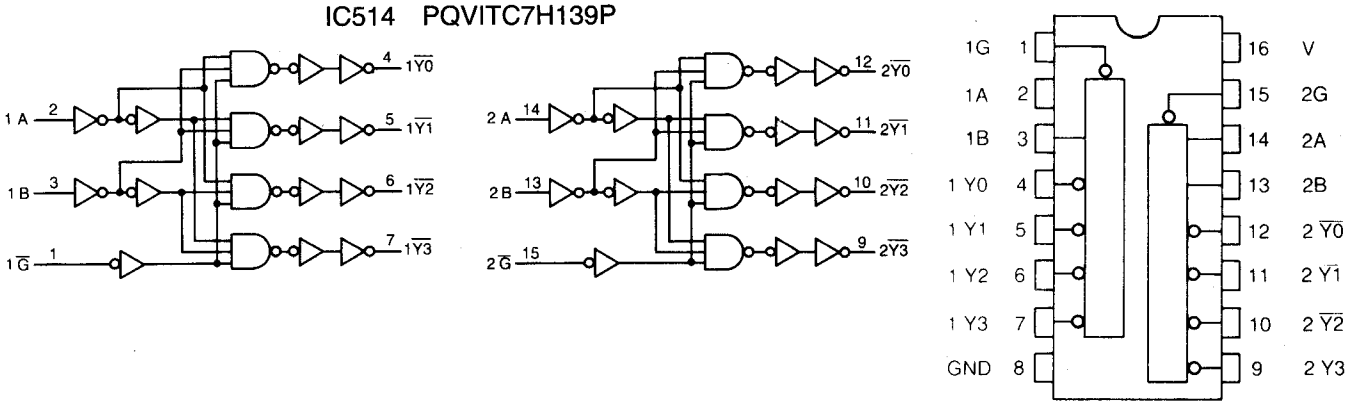

IC602 PQVIBU3140

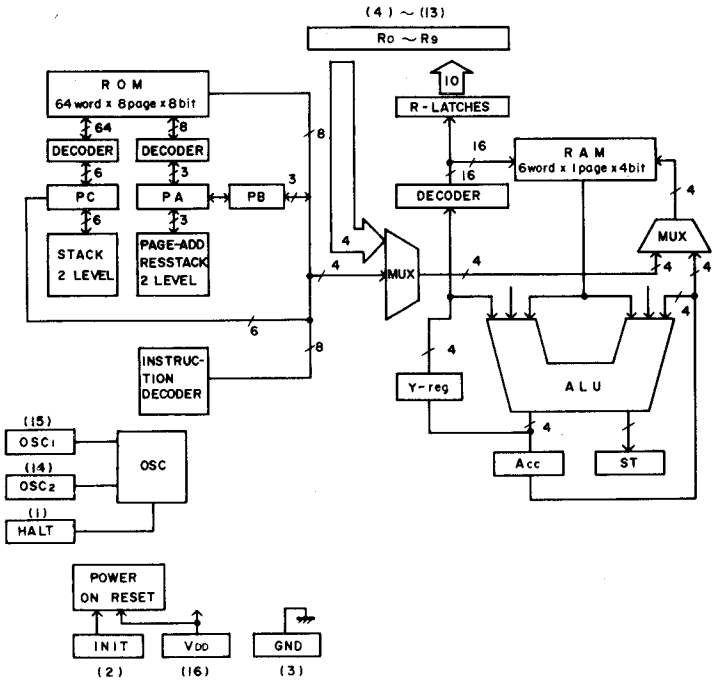

IC513 PQVITC7H138P

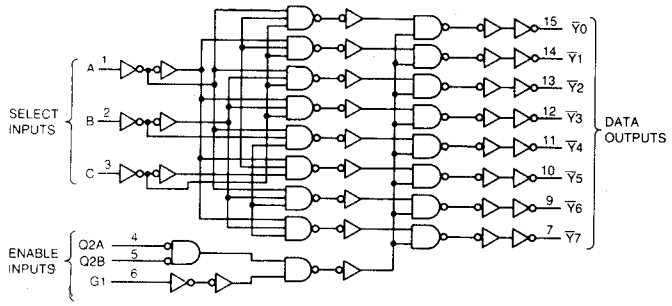

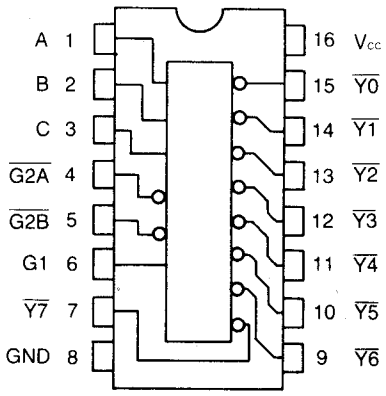

IC504, 505 PQVIMT8870BC

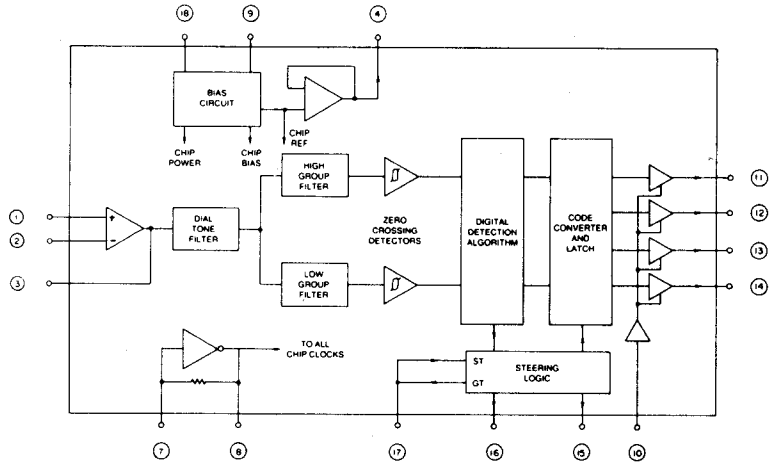

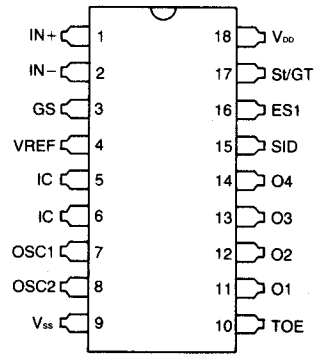

IC600 PQVIHD75189P

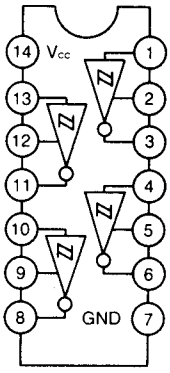

IC601 PQVIHD75188P

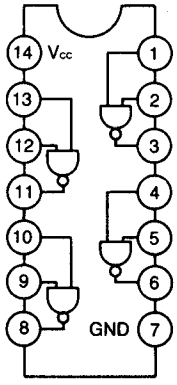

IC506 PQVIMS6242BS

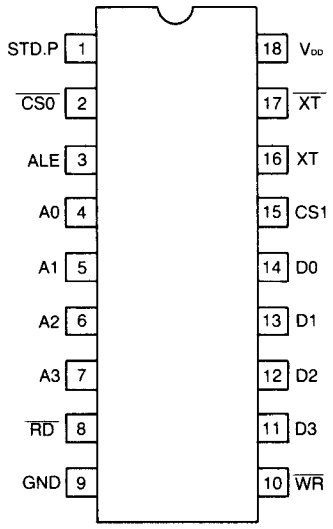

EXTENSION CORD CONNECTING METHOD

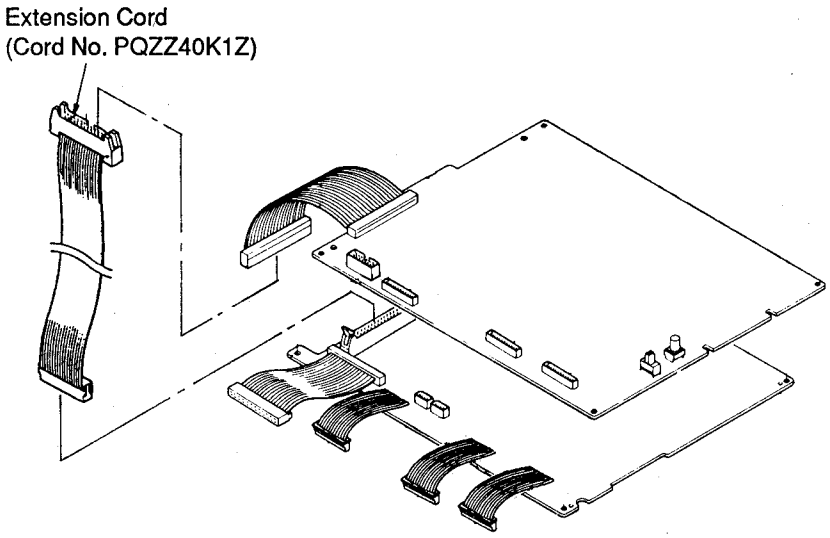

ADJUSTMENTS

■ OSCILLATION PERIOD ADJUSTMENT

Perform the following adjustment after replacing IC506 and VC500.

1. Connect the AC cord to the AC power source.
2. Set the power switch to ON.
3. Connect the lead wire. (See Fig. 16)
   (After adjustment, remove the lead wire.)
4. Push the reset switch.
5. Connect the frequency counter. (See Fig. 15)
6. Set the frequency counter to PERIOD.
7. Adjust VC500 for a reading of ( ) msec on the frequency counter.

Room temperature for adjusting (°C)	Period value (msec)	Room temperature for adjusting (°C)	Period value (msec)
14~14.9	15.624943 (±0.00001)	20~20.9	15.624880 (±0.00001)
15~15.9	15.624933 (±0.00001)	21~21.9	15.624876 (±0.00001)
16~16.9	15.624922 (±0.00001)	22~27.9	15.624870 (±0.00001)
17~17.9	15.624910 (±0.00001)	28~28.9	15.624876 (±0.00001)
18~18.9	15.624899 (±0.00001)	29~29.9	15.624880 (±0.00001)
19~19.9	15.624888 (±0.00001)		

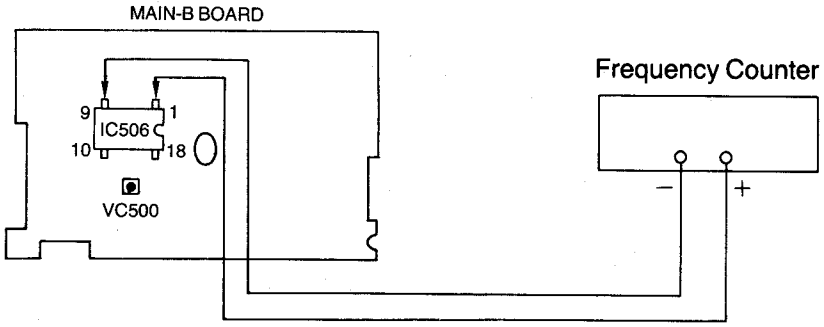

Fig. 15

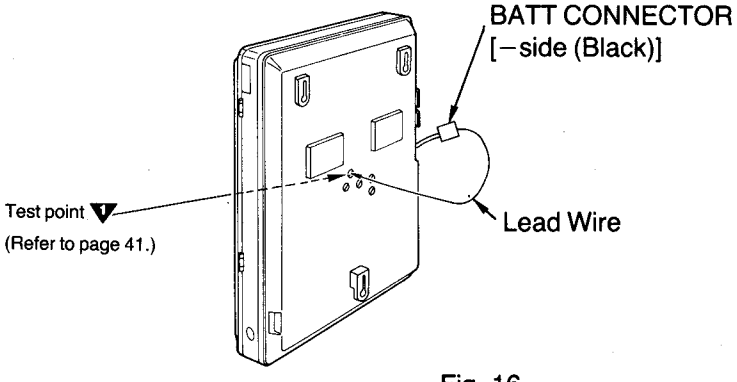

Fig. 16

EXPLODED VIEW

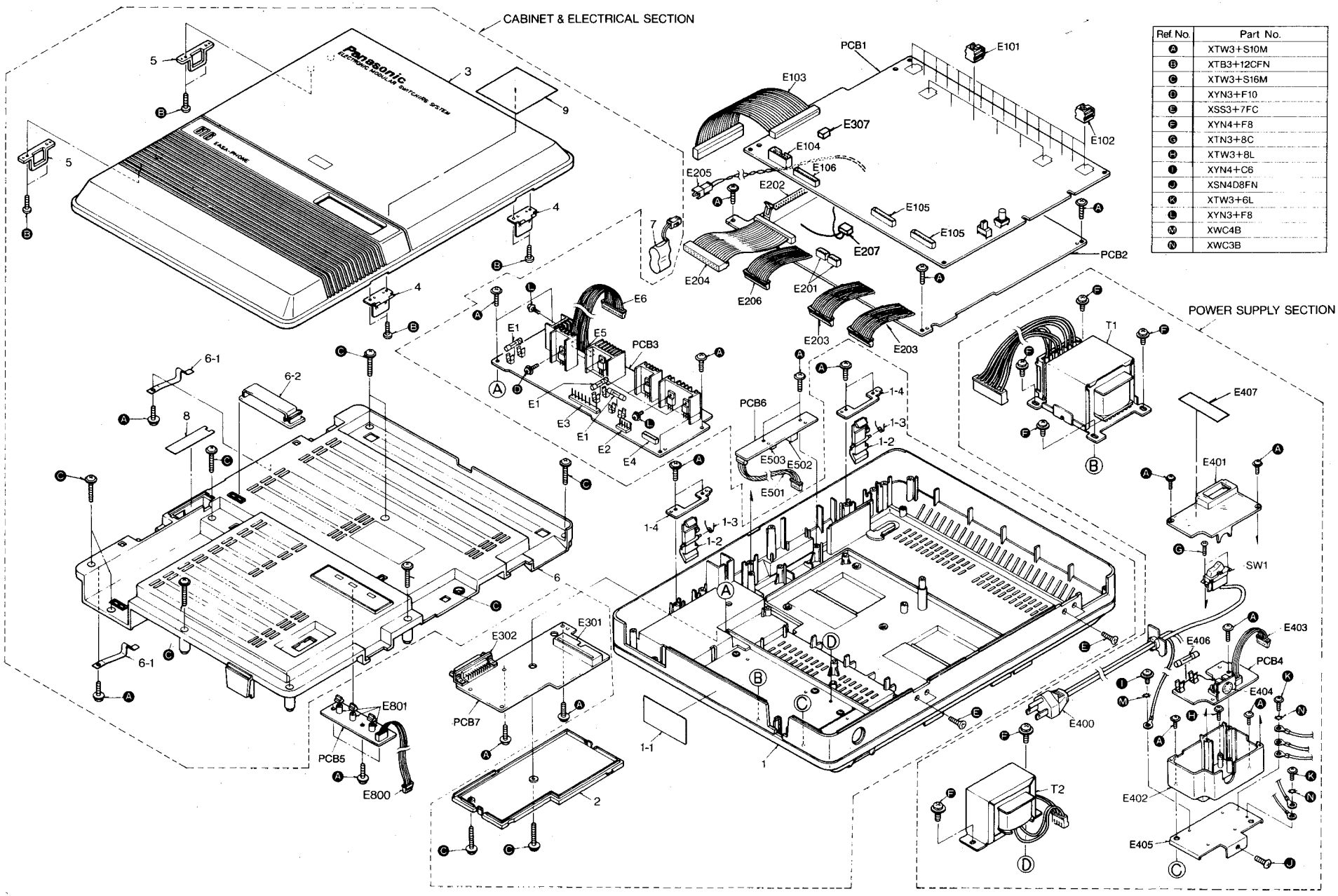

Ref. No.	Part No.
A	XTW3+S10M
B	XTB3+12CFN
C	XTW3+S16M
D	XYN3+F10
E	XSS3+7FC
F	XYN4+F8
G	XTN3+8C
H	XTW3+8L
I	XYN4+C6
J	XSN4D8FN
K	XTW3+6L
L	XYN3+F8
M	XWC4B
N	XWC3B

Fig. 17

ACCESSORIES & PACKING MATERIALS

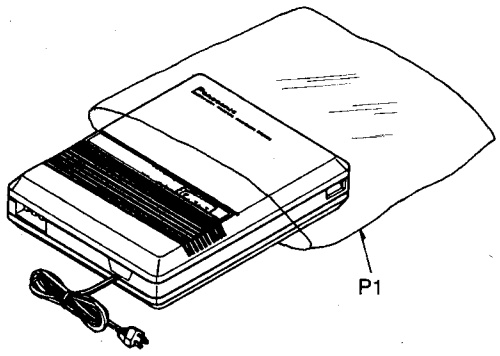

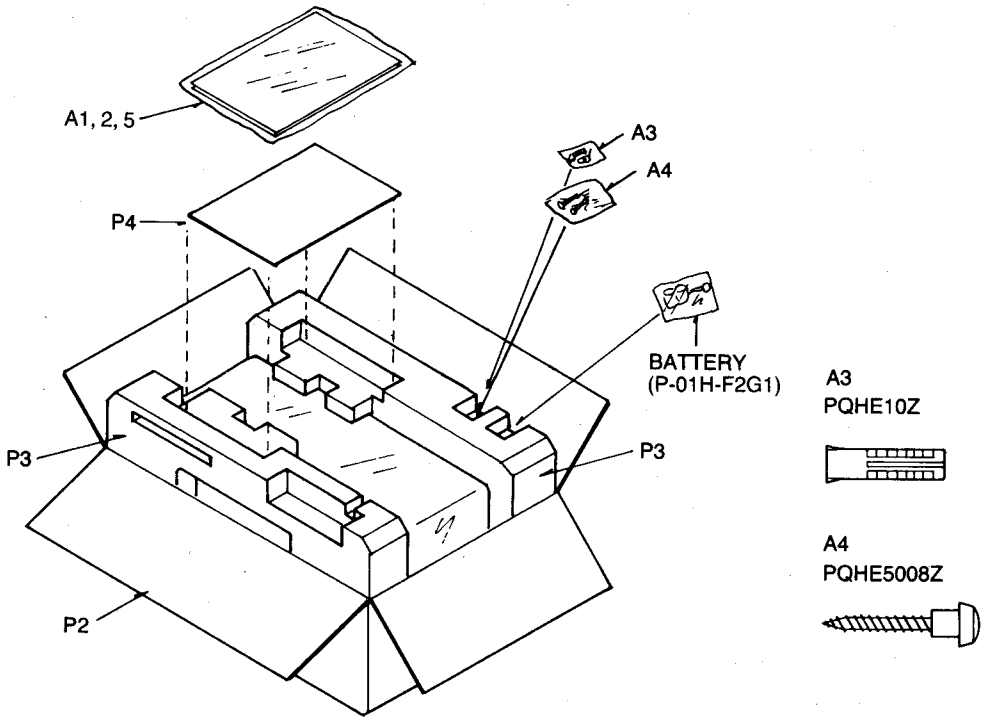

Fig. 18

REPLACEMENT PARTS LIST

Notes: Model KX-T61610-1

1. Printed circuit board assembly with mark (NLA) is no longer available after production discontinuation of the complete set.
2. Important safety notice.
   Components identified by the ⚠ mark special characteristics important for safety.
   When replacing any of these components, use only manufacturer's specified parts.
3. The S mark indicates service standard parts and may differ from production parts.
4. RESISTORS & CAPACITORS
   Unless otherwise specified.
   All resistors are in ohms(Ω) k=1000Ω,M=1000kΩ
   All capacitors are in MICRO FARADS(μF) P= 0.001μF
   *Type &Wattage of Resistor
   Type

ERC:Solid	ERX:Metal Film	PQRD:Carbon
ERD:Carbon	ERG:Metal Oxide	PQRQ:Fuse
PQ4R:Chip	ERO:Metal Film	ERF:Wire Wound

Wattage

10,16,18:1/8W	14,25,S2:1/4W	12,50,S1:1/2W	1:1W	2:2W	5:5W

*Type & Voltage of Capacitor
Type

ECFD:Semi-Conductor	ECCD,ECKD,PQCBC,PQVP : Ceramic
ECQS:Styrol	ECQM,ECQV,ECQE,ECQU,ECQB : Polyester
PQCBX,ECUV:Chip	ECEA,ECSZ,ECOS : Electrolytic
ECMS:Mica	ECQP : Polyproplylene

Voltage

ECQ Type	ECQG ECQV Type	ECSZ Type	Others	
1H: 50V	05: 50V	OF:3.15V	OJ :6.3V	1V :35V
2A:100V	1:100V	1A:10V	1A :10V	50,1H:50V
2E:250V	2:200V	1V:35V	1C :16V	1J :63V
2H:500V		OJ:6.3V	1E,25:25V	2A :100V

Ref. No.	Part No.	Part Name & Description	Pcs
		CABINET & ELECTRICAL PARTS	
1	PQYMT61610M1	Rear Cabinet Assembly	1
1-1	PQGT384Z	Name Plate	1
1-2	PQHR9120Z8	Hook	2
1-3	PQUS91Z	Spring, Hook	2
1-4	PQUL51Z	Bracket, Hook	2
2	PQKE31Z8	Cabinet Door	1
3	PQYF1T61610M	Front Cabinet Assembly	1
4	PQBH2Z	Hinge	2
5	PQHR9121Z8	Hinge	2
6	PQYF2T61610M	Inside Cover Assembly	1
6-1	PQUS102Z	Leaf Spring	2
6-2	PQHR5044Z	Cord Holder	1
7	P-01H-F2G1	Battery	1
8	PQUV50Z	Battery Cover	1
9	PQQT4134Z	Label, Front Cabinet	1
		ACCESSORIES AND PACKING MATERIALS	
A1	PQQX5341Z	Installation Manual	1
A2	PQQX5367Z	User Guide	1
A3	PQHE10Z	Mounting Bracket (Curl Plug)	3
A4	PQHE5008Z	Mounting Bracket (Screw)	3
A5	PQQX5402Z	User Guide (for KX-T30830/30820)	1
P1	XZB45X06A05	Protection Cover	1
P2	PQPK431Y	Packing Case	1
P3	PQPN9036Z	Pad Complete (L,R Side)	1
P4	PQPN668Z	Pad	1

Ref. No.	Part No.	Part Name & Description		Pcs
		MAIN-A BOARD PARTS		
PCB1	PQWP161610M1	Main-A P.C. Board Assy (NLA)		1
		(ICs)		
IC300,301	PQVI671152F	IC		2
		(TRANSISTORS)		
Q300A-300P	2SB644	Transistor (Si)		16
Q301A-301P	2SD639	Transistor (Si)		
Q302A-302P	PQVTDTC114Y	Transistor (Si)	S	16
Q303A-303P	DTA143A	Transistor (Si)	S	16
Q304A-304P ,305I-305P	2SC2021	Transistor (Si)		24
Q305A-305H ,307	2SA937	Transistor (Si)		9
Q306	2SB1015	Transistor (Si)		1
Q308	2SD1406	Transistor (Si)		1
Q309	DTC124XA	Transistor (Si)		1
Q310,311, ,312	DTA124EA	Transistor (Si)		3
		(DIODES)		
D300I-300P ,301A-301P ,302A-302P ,303A-303P ,304A-304P ,305A-305P ,309A-309P ,310A-310P ,311A-311P ,312A-312P ,313-322	1SS131	Diode (Si)		162
	1SS131	Diode (Si)		
D306A-306P ,307A-307P	MA4047	Diode (Si)		16
D308A-308P	MA4030	Diode (Si)		16
		(VARISTORS)		
SA30A-30F ,31A-31F	PQVDSAE310F1	Varistor (Surge Absorber)	S	12
ZNR30A-30P ,31A-31P	ERZC03DK241	Varistor		32
				1
		(PHOTO ELECTRIC TRANSDUCER)		
PC300A- PC300P	PQVITLP521	Photo Coupler		16
				1
		(COMPONENTS COMBINATIONS)		
Z300,301 ,303	EXBP88222K	Resistor Array	S	3
Z302	PQRS8B8102J	Resistor Array		1
Z304,305	EXBP88473K	Resistor Array	S	2
		(COILS)		
L30A-30F, ,31A-31F	PQLQZK101K	Choke Coil		12
L32A-32F, ,33A-33F	PQLQZM100K	Choke Coil		12
L300A-300P ,301A-301P ,302A-302P ,303A-303P	PQLQZM2R2M	Choke Coil		64

Ref. No.	Part No.	Part Name & Description		Pcs
		(TRANSFORMERS)		
T300A-300P	ETA14Y85AY	Interface Transformer		16
T301A-301P	ETE13K38AY	Pulse Transformer		16
		(CRYSTAL OSCILLATOR)		
X300	PQVCX4000N8Z	Crystal Oscillator		1
		(SWITCHES)		
SW2	PQSH1A12Z	Switch, Reset		1
SW3	PQSS2A20Z	Switch, System Program		1
		(RELAYS)		
RLY10A-10F	PQSL49Z	Relay		6
RLY30A-30P	PQSL41Z	Relay		16
		(CAPACITORS)		
C300A-300P ,301A-301P	ECEA1HU3R3	3.3	S	32
C302A-302P	ECEA1HU2R2	2.2		16
C303A-303P ,304A-304P	ECKD1H472MD	0.0047		32
C305A-305P	ECEA1HUR47	0.47		16
C306A-306P ,307A-307P	ECEA1HU010	1		32
C309, 313	ECCD1H221J	220P		2
C310,311	ECCD1H470KC	47P		2
C314,315	ECEA1EU101	100		2
C317,322	ECEA1VU101	100		2
C318-321	ECEA1VU330	33	S	4
C330A-330F	ECKDKC222KB	0.0022		6
C340,341	ECEA1VSS222	2200		2
C360,363	ECQV1H104JZ	0.1		2
C361,362	ECKD1H223MD	0.022		2
C365A-365P	ECUV1H224ZF	0.22		16
C370	ECEA1CU102	1000		1
		(RESISTORS)		
R300A-300P ,301A-301P	PQ4R10XJ220	22		32
R302A-302P ,303A-303P	PQ4R10XJ682	6.8k		32
R304A-304P	PQRD2TJ102	1k	S	16
R305A-305P	PQ4R10XJ470	47		16
R306A-306P	PQ4R10XJ154	150k		16
R307A-307P	PQ4R10XJ103	10k		16
R308A-308P	PQ4R10XJ561	560		16
R309-312	ERD16TJ154	150k		4
R313	ERD16TJ105	1M		1
R314,315	ERD16TJ103	10k		2
R316	ERD16TJ104	100k		1
R317	ERD16TJ393	39k		1
R318	ERD16TJ821	820		1
R319	ERD16TJ181	180		1
R320, 370, ,321A-321P	ERD16TJ101	100		18
R322A-322P	PQ4R10XJ3R3	3.3		16
R323A-323P	PQ4R10XJ472	4.7k		16
R324A-324P ,325A-325P	PQ4R10XJ121	120		32
R326A-326P	PQ4R10XJ222	2.2k		16
R360A-360P	PQ4R10XJ820	82		16
R375	ERD16TJ220	22		1

Ref. No.	Part No.	Part Name & Description		Pcs
		(OTHERS)		
E301	PQJJ1TA3Y	Jack, CO (MJ1A-MJ1F)		6
E302	PQJJ1TB16Z	Jack, EXT (MJ2A-MJ2P)		16
E303	PQJS40R30Z	Connector Socket, 40P (J1)		1
E304	PQJP14D49Z	Connector Plug, 14P (CN10)		1
E305	PQJP12D68Z	Connector Plug, 12P (CN6,7)		2
E306	PQJP7D68Z	Connector Plug, 7P (CN9)		1
E307	PQJP2D72Z	Connector Plug, 2P (CNN1)		1
MAIN-B BOARD PARTS				
PCB2	PQWP261610M1	Main-B P.C.Board Ass'y (NLA)		1
		(ICs)		
IC200A-IC200F	PQVINJM4558M	IC		6
IC201A-IC201F	PQVITC4066BF	IC		6
IC400-412	PQVIM402101P	IC		13
IC413,414	PQVITD62706P	IC		2
IC426,512	PQVINJM4558D	IC		2
IC500	PQVIH63B03XP	IC		1
IC501	PQWIT61610M2	IC		1
IC502,503	PQVIHM6264LA	IC		2
IC504,505	PQVIMT8870BC	IC	S	2
IC506	PQVIMS6242BS	IC		1
IC507	PQVILR4089	IC		1
IC508	PQVI63HB110	IC		1
IC509	PQVITC7H08P	IC		1
IC510	PQVITC7H32P	IC		1
IC511	PQVITC7H04P	IC	S	1
IC513	PQVITC7H138P	IC	S	1
IC514	PQVITC7H139P	IC		1
		(TRANSISTORS)		
Q201A-201F ,202A-202F ,203A-203F ,204A-204F ,400,401,402	DTA124XA	Transistor (Si)		27
Q205A-205F	2SA1626	Transistor (Si)	⚠	6
Q206A-206F	2SC2590	Transistor (Si)	⚠	6
Q210A-210F ,505	DTA144A	Transistor (Si)	S	7
Q500	2SA937	Transistor (Si)		1
Q502	PQVTDTC114Y	Transistor (Si)	S	1
Q503,504	2SC2021	Transistor (Si)		2
		(DIODES)		
D200A-200F ,201A-201F ,500,501 ,503,504 ,505,508- ,512,520 ,521	1SS131	Diode (Si)	⚠	24
D203A-203F	PQVDHZS2B1	Diode (Si)	⚠	6
D204A-204F ,205A-205F	MA4047	Diode (Si)		12
D210A-210F	PQVDS1YB40F1	Diode (Si)	⚠	6
D400	MA4091	Diode (Si)		1
D502	MA4062	Diode (Si)		1
D506	MA4036	Diode (Si)		1
D534	PQVDMTZ15A	Diode (Si)		1
VD500	PQVD1SV124	Diode (Si)		1

Ref. No.	Part No.	Part Name & Description	Pcs
		(VARISTORS)	
ZNR200A-ZNR200F	ERZC07DK820	Varistor ⚠	6
		(TRANSFORMERS)	
T200A-200F	ETA14Y85AY	Interface Transformer ⚠	6
		(COMPONENT COMBINATIONS)	
Z500,501,502	EXBP88473K	Resistor Array S	3
		(THERMISTORS)	
TH500	PQRRTS203U	Thermistor	1
TH501	PQRRTS104U	Thermistor	1
		(CRYSTAL OSCILLATORS)	
X500	PQVCX7600N5Z	Crystal Oscillator	1
X501	PQVCX3579H5R	Crystal Oscillator	1
X502	PQVCL3276N4Z	Crystal Oscillator	1
		(VARISTORS)	
SA200A-SA200F	PQVDSAE310F1	Varistor (Surage Absorber) ⚠ S	6
		(VARIABLE CAPACITOR)	
VC500	PQCVTZB30B	Trimmer	1
		(COILS)	
L500-504	PQLQZM1R5M	Choke Coil	5
L520	PQLQZM2R2M	Choke Coil	1
		(PHOTO ELECTRIC TRANSDUCERS)	
PC200A-PC200F	PQVIPC851K	Photo Coupler ⚠ S	6
PC201A-PC201F	PQVITLP521	Photo Coupler ⚠ S	6
PC202A-PC202F	PQVIPC814K	Photo Coupler ⚠ S	6
		(CAPACITORS)	
C201A-201F	ECQE2E474MZ	0.47 ⚠	6
C202A-202F,563	ECEA1HU100	10 ⚠	7
C203A-203F	ECEA1HU220	22 ⚠	6
C205A-205F	ECEA1AU220	22 ⚠	6
C206A-206F	ECKD1H102KB	1000P	6
C207A-207F	ECQV1H333JZ	0.033	6
C208A-208F,209A-209F,211A-211F,215A-215F	ECQV1H563JZ	0.056	24
C210A-210F,214A-214F	ECCD1H121KC	120P	12
C212A-212F,213A-213F,400	ECQM1H183JZ	0.018	13
C220A-220F,401	ECEA1EU101	100	6
C230A-230F	ECUV1H121JC	120P	7
C405-408	ECQV1H273JZ	0.027	6
C500,501	ECCD1H150JC	15P	4

Ref. No.	Part No.	Value	Pcs
C502,505-,509,511,513,517,522,523,530,590	ECQV1H104JZ	0.1	13
C503,504,510,512,531,532,533,591	ECKD1H223MD	0.022	8
C514	ECQM1H472JV	0.0047	1
C515	ECEA1AU470	47 S	1
C516,519	ECKD1H103MD	0.01	2
C518	ECEA0JSS222	2200	1
C521	ECEA1HU3R3	3.3	1
C524	EECW0HS105Z	1	1
C525-528,551	ECEA1VU330	33 S	5
C529	ECEA1HU010	1	1
C550	ECEA1EU100	10	1
C561	ECQV1H474JZ	0.47	1
C562	ECQV1H124JZ	0.12	1
		(RESISTORS)	
R200A-200F,510,512,515,518,550	ERD16TJ104	100k ⚠	11
R201A-201F	PQRD12VJ223	22k ⚠	6
R202A-202F,220A-220F,223A-223F,232A-232F,233A-233F,235A-235F,237A-237F,490	ERD16TJ122	1.2k ⚠	43
R203A-203F	ERD16TJ5R6	5.6 ⚠	6
R204A-204F,524,528,539,546,547,560,561	ERD16TJ103	10k ⚠	13
R205A-205F	ERD25TJ390	39 ⚠	6
R206A-206F	ERD10TLJ183	18k ⚠	6
R207A-207F,209A-209F,210A-210F,519,535	ERD16TJ472	4.7k ⚠	20
R208A-208F	ERD16TJ392	3.9k ⚠	6
R221A-221F	ERD16TJ152	1.5k	6
R222A-222F,234A-234F,236A-236F	ERD16TJ471	470	18
R224A-224F,225A-225F,230A-230F,231A-231F	ER016CKF1003	100k	24
R226A-226F,227A-227F,228A-228F,229F	ER016CKF3003	300k	24
R238A-238F,239A-239F,240A-240F,470-484,500-508,540,563,564	ERD16TJ473	47k	45

Ref. No.	Part No.	Part Name & Description	Pcs
R241A-241F ,250A-250F ,255A-255F ,525,538 ,562,565	ERD16TJ223	22k	22
R242A-242F	ERD16TJ823	82k	6
R260A-260F	PQ4R18XJ821	820 ⚠	6
R400-407	ER016CKF1151	1.15k	8
R408-423	ER016CKF49R9	49.9	16
R424-439	ER016CKF1101	1.1k	16
R456-459	ER016CKF6491	6.49k	4
R460,461	ERD16TJ182	1.8k	2
R509,511	ERD16TJ333	33k	2
R513,514	ERD16TJ334	330k	2
R516	ERD16TJ154	150k	1
R517	ERD16TJ105	1M	1
R520	ERD16TJ821	820	1
R521,522 ,523	ERD16TJ391	390	3
R526	ERD16TJ561	560	1
R527,549	ERD16TJ681	680	2
R529	ERD16TJ222	2.2k	1
R530	ERD16TJ683	68k	1
R533	ERD16TJ102	1k	1
R536	ERD16TJ221	220	1
R541	ER016CKF3002	30k	1
R542	ERD16TJ153	15k	1
R543	ERD16TJ183	18k	1
R544	ERD16TJ394	390k	1
R545	ERD16TJ184	180k	1
R580,581	ERD16TJ151	150	2
R582	ERD16TJ101	100	1
		(OTHERS)	
E201	PQJP4D14Z	Connector Plug, 4P (CN2,3)	2
E202	PQJP40D53Z	Connector Plug, 40P (CN1) ⚠	1
E203	PQJS12L31Z	Connector Socket, 12P (J6,7)	2
E204	PQJS26R30Z	Connector Socket, 26P (J4)	1
E205	PQJS2L26Y	Connector Socket, 2P (J5)	1
E206	PQJS9L31Z	Connector Socket, 9P (J8)	1
E207	PQJS2L55Z	Connector Socket, 2P (JN1)	1

POWER REGULATOR BOARD PARTS

PCB3	PQWP361610M1	Power P.C.Board Ass'y (NLA)	1
		(ICs)	
IC1	PQVITA7924	IC	1
IC2	PQVIPC79M18F	IC	1
IC3	PQVITA7812AP	IC S	1
IC4	AN7912T	IC S	1
		(TRANSISTORS)	
Q2	2SA937	Transistor (Si)	1
Q3	2SB834	Transistor (Si)	1
Q4	2SC2673	Transistor (Si)	1
Q5	2SA881	Transistor (Si)	1
Q6	2SB1015	Transistor (Si)	1
Q7	2SD1406	Transistor (Si)	1
		(DIODES)	
D1,3	PQVD2B4B41	Diode (Si)	2
D2	PQVD3B4B41	Diode (Si)	1
D10,12,13 ,21,22	1SR35-200	Diode (Si)	5
D14	MA4110	Diode (Si)	1
D15-18 ,23-29	1SS131	Diode (Si)	11
D19	MA1056	Diode (Si)	1
D20	PQVDEK03	Diode (Si)	1
		(COMPONENT COMBINATION)	
CA1	PQXF6WB07	Capacitor Array	1
		(CAPACITORS)	
C1	ECET50S103SW	10000	1
C2	ECET35S472SW	4700	1
C3	ECEA1EU331	330	1
C4,6	ECET35S682SW	6800	2
C5,7	ECEA1EU331	330	2
C8	ECET35S222SW	2200	1
C9	ECEA1AU221	220	1
C10	ECKD1H103MD	0.01	1
C11	ECEA1AHA101	100	1
C12	ECKD1H102KB	0.001	1
C13	ECEA1HU2R2	2.2	1
		(RESISTORS)	
R12	ERD16TJ682	6.8k	1
R13	ERD16TJ331	330	1
R14	ERDS1TJ101	100	1
R15,16	ERD16TJ823	82k	2
R17,18	ERD16TJ103	10k	2
R19,20	ERDS1TJ151	150	2
R21,22	PQRD1VJ1R0	1	2
R23,24	ERDS1TJ181	180	2
R30	ERD25TJ153	15k	1
		(OTHERS)	
E1	XBA1C20NU100	Fuse (F1-F3)	3
E2	PQJP4D16Z	Connector Plug, 4P (CN13)	1
E3	PQJP7D19Z	Connector Plug, 7P (CN14)	1
E4	PQJP7G3Z	Connector Plug, 7P (CN12)	1
E5	PQJP9D68Z	Connector Plug, 9P (CN8)	1
E6	PQJS7L33Z	Connector Socket, 7P (JA9)	1

POWER SUPPLY PARTS

PCB4	PQWP461610M1	Power P.C.Board Ass'y (NLA) ⚠ (with/C401-404,ZNR401, L401, E403, E404, E406)	1
		(CAPACITORS)	
C401,404	ECQU1A473MH	0.047 ⚠	2
C402,403	ECKDKC222KB	0.0022 ⚠	2
		(VARISTOR)	
ZNR401	ERZC14DK431U	Varistor ⚠	1
		(COIL)	
L401	PQLE61	Coil ⚠	1
		(SWITCH)	
SW1	EST15704V	Switch, Power ⚠	1
		(TRANSFORMERS)	
T1	PQLT5M9M1A	Power Transformer ⚠	1
T2	PQLT1M9M1A	Bell Transformer	1

Ref. No.	Part No.	Part Name & Description	Pcs
		(OTHERS)	
E400	PQWAT616M	AC Power Cord Assembly ⚠	1
E401	PQUV36Y	Power Box Cover	1
E402	PQUV37Y	Power Box	1
E403	PQJS7L6Z	Connector Socket, 7P (J10) ⚠	1
E404	PQJP7C1Z	Connector Plug, 7P (BATT JACK) ⚠	1
E405	PQMD4012Z	Bracket, Power Box	1
E406	XBA2F15NU2	Fuse (F400) ⚠	1
E407	PQQT4181Z	Label	1
		LED BOARD PARTS	
PCB5	PQWP5T61610M	LED P.C.Board Ass'y (NLA)	1
		(DIODES)	
D800	LN220RPH	LED	1
D801	LN420YPH	LED	1
D802	LN320GPH	LED	1
		(OTHERS)	
E800	PQJS4L32Z	Connector Socket, 4P (J6)	1
E801	PQHR402Z	Spacer, LED	3
		JACK BOARD PARTS	
PCB6	PQWP661610M1	Jack P.C.Board Ass'y (NLA)	1
		(COILS)	
L501,502	PQLQZY333J	Choke Coil	2
L503,505	PQLQZL2R2K	Choke Coil	2
L504	PQLQZL1R0K	Choke Coil	1
		(TRANSFORMERS)	
T501,502	PQLT2D6A	Transformer	1
		(CAPACITOR)	
C501	ECFD1E473MD	0.047	1
		(OTHERS)	
E501	PQJS4L17Y	Connector Socket, 4P (J7)	1
E502	PQJJ1E1Y	Jack, Paging	1
E503	SJJK8	Jack, EXT. Music	1
		SMDR BOARD PARTS	
PCB7	PQWP761610M1	SMDR P.C.Board Ass'y (NLA)	1
		(ICs)	
IC600	PQVIHD75189P	IC	1
IC601	PQVIHD75188P	IC	1
IC602	PQVIBU3140	IC	1
IC603,604 ,605	PQVINJM4558D	IC	3
		(TRANSISTORS)	
Q600	DTA143XA	Transistor (Si)	1
Q601,602 ,603	DTC124EA	Transistor (Si)	3
Q604	2SC2878	Transistor (Si)	1
Q605	2SC2021	Transistor (Si)	1

Pcs	Ref. No.	Part Name & Description	Pcs
		(DIODES)	
D600,601	1SS131	Diode (Si)	2
		(COILS)	
L600,603	PQLQZM1R5M	Choke Coil	2
L601,602 ,604	PQLQZM2R2M	Choke Coil	3
		(CAPACITORS)	
C600-605 ,614	ECKD1H102KB	0.001	6
C603,606 ,607	ECKD1H223MD	0.022	3
C608	ECQM1H332JV	0.0033	1
C609,611 ,626	ECQV1H104JZ	0.1	3
C610	ECQM1H682JV	0.0068	1
C612	ECQV1H473JZ	0.047	1
C613	ECQV1H683JZ	0.068	1
C615	ECQM1H222JV	0.0022	1
C616	ECQV1H124JZ	0.12	1
C617,621	ECQM1H103JV	0.01	2
C618	ECEA1HU330	33	1
C619,620	ECEA1HU4R7	4.7	2
C622,623	ECEA1HU010	1	2
C630	ECEA1HU100	10 S	1
C640	ECQV1H104JZ	0.1	1
		(RESISTORS)	
R600	ERD25TJ561	560	1
R601	ERD16TJ224	220k	1
R602,611	ERD16TJ273	27k	2
R603	ERD16TJ124	120k	1
R604	ERD16TJ393	39k	1
R605,606 ,607,621 ,623	ERD16TJ103	10k	5
R608,609 ,610	ERD16TJ104	100K	3
R612,622	ERD16TJ223	22k	2
R613	ERD16TJ102	1k	1
R614	ERD16TJ563	56k	1
R615,616	ERD16TJ123	12k	2
R617	ERD16TJ222	2.2k	1
R618	ERD16TJ474	470k	1
R619,640	ERD16TJ472	4.7k	2
R620	ERD16TJ334	330k	1
R630,631 ,632	ERD16TJ822	8.2k	3
R633	ERD16TJ683	68k	1
		(OTHERS)	
E301	PQJP26D69Z	Connector Plug, 26P (CN4)	1
E302	PQJS25P3Z	EIA Connector (CN16)	1